US009351195B2

(12) **United States Patent**
Chhatriwala et al.

(10) **Patent No.: US 9,351,195 B2**
(45) **Date of Patent: May 24, 2016**

(54) **HANDLING INCOMPRESSIBLE DATA PACKETS ON MULTIPLE DATA FLOWS**

(71) Applicant: **QUALCOMM Incorporated**, San Diego, CA (US)

(72) Inventors: **Murtuza Taheri Chhatriwala**, San Diego, CA (US); **Venkata Ramanan Venkatachalam Jayaraman**, Del Mar, CA (US); **Rohit Kapoor**, San Diego, CA (US); **Srinivasa Rao Eravelli**, San Diego, CA (US); **Sumanth Govindappa**, San Diego, CA (US); **Sivaram Srivenkata Palakodety**, San Diego, CA (US)

(73) Assignee: **QUALCOMM Incorporated**, San Diego, CA (US)

(*) Notice: Subject to any disclaimer, the term of this patent is extended or adjusted under 35 U.S.C. 154(b) by 115 days.

(21) Appl. No.: **14/312,419**

(22) Filed: **Jun. 23, 2014**

(65) **Prior Publication Data**

US 2015/0085876 A1 Mar. 26, 2015

Related U.S. Application Data

(60) Provisional application No. 61/881,134, filed on Sep. 23, 2013.

(51) **Int. Cl.**

H04W 28/06	(2009.01)
H04W 24/02	(2009.01)
H04L 29/06	(2006.01)

(52) **U.S. Cl.**

CPC ***H04W 28/06*** (2013.01); ***H04L 69/04*** (2013.01)

(58) **Field of Classification Search**

CPC H04W 28/06; H04W 28/065; H04B 7/14; H04B 7/15; H04B 7/145; H04B 7/15507; H04B 7/15571; H04B 10/29; H04B 7/15542

See application file for complete search history.

(56) **References Cited**

U.S. PATENT DOCUMENTS

6,195,024 B1 2/2001 Fallon
7,420,992 B1 * 9/2008 Fang H04L 12/4633 370/477

(Continued)

FOREIGN PATENT DOCUMENTS

EP 2 469 793 A1 6/2012

OTHER PUBLICATIONS

International Search Report and Written Opinion—PCT/US2014/056758—ISA/EPO—Jan. 19, 2015. (8 total pages).

Primary Examiner — Ahmed Elallam
(74) *Attorney, Agent, or Firm* — Arent Fox LLP

(57) **ABSTRACT**

Methods and apparatus of compression on multiple data flows for communication between a user equipment (UE) and a serving node. The methods and apparatus include receiving multiple data flows for compression, wherein each of the multiple data flows includes a plurality of data packets, with each data packet having a data packet header and a payload. Further, the methods and apparatus include determining a compression state for each of the multiple data flows. Moreover, the methods and apparatus include performing a first compression algorithm on each of the multiple data flows determined to have a compression state set to a do-not-compress state, wherein the first compression algorithm includes compressing the data packet header of each data packet without compressing the payload of each data packet.

26 Claims, 16 Drawing Sheets

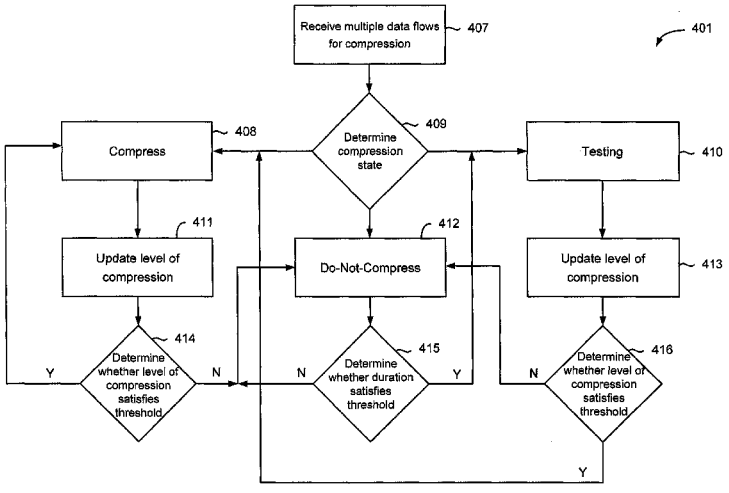

(56) **References Cited**

U.S. PATENT DOCUMENTS

8,599,878	B2 *	12/2013	Wu	H04W 28/06 370/392
8,867,447	B2 *	10/2014	Kotecha	H04L 69/04 370/241
8,885,670	B2 *	11/2014	Niddam	H04L 69/04 370/389
8,886,837	B2 *	11/2014	Short	H04L 69/04 709/224
9,172,772	B2 *	10/2015	Venkatachalam Jayaraman	H04L 69/04
2004/0114634	A1 *	6/2004	Liu	H04L 63/045 370/521
2006/0104278	A1 *	5/2006	Chang	H04L 47/10 370/392
2007/0058679	A1 *	3/2007	Pelletier	H04W 28/06 370/477
2008/0080559	A1 *	4/2008	Singh	H04W 28/04 370/477
2008/0101220	A1 *	5/2008	Kim	H04L 12/189 370/229
2010/0098109	A1 *	4/2010	Le Pennec	H03M 7/3066 370/477
2011/0058474	A1 *	3/2011	Nagapudi	H04L 45/745 370/235
2012/0201205	A1 *	8/2012	Gopalakrishnan	H04L 1/1816 370/329
2013/0022032	A1 *	1/2013	Taghavi Nasrabadi	H04W 28/06 370/338
2013/0064177	A1 *	3/2013	Venkatachalam	H04W 80/00 370/328
2014/0101485	A1 *	4/2014	Wegener	H03M 7/3068 714/32
2014/0233376	A1 *	8/2014	Yu	H04W 28/06 370/230
2014/0369365	A1 *	12/2014	Denio	H04L 69/16 370/474

* cited by examiner

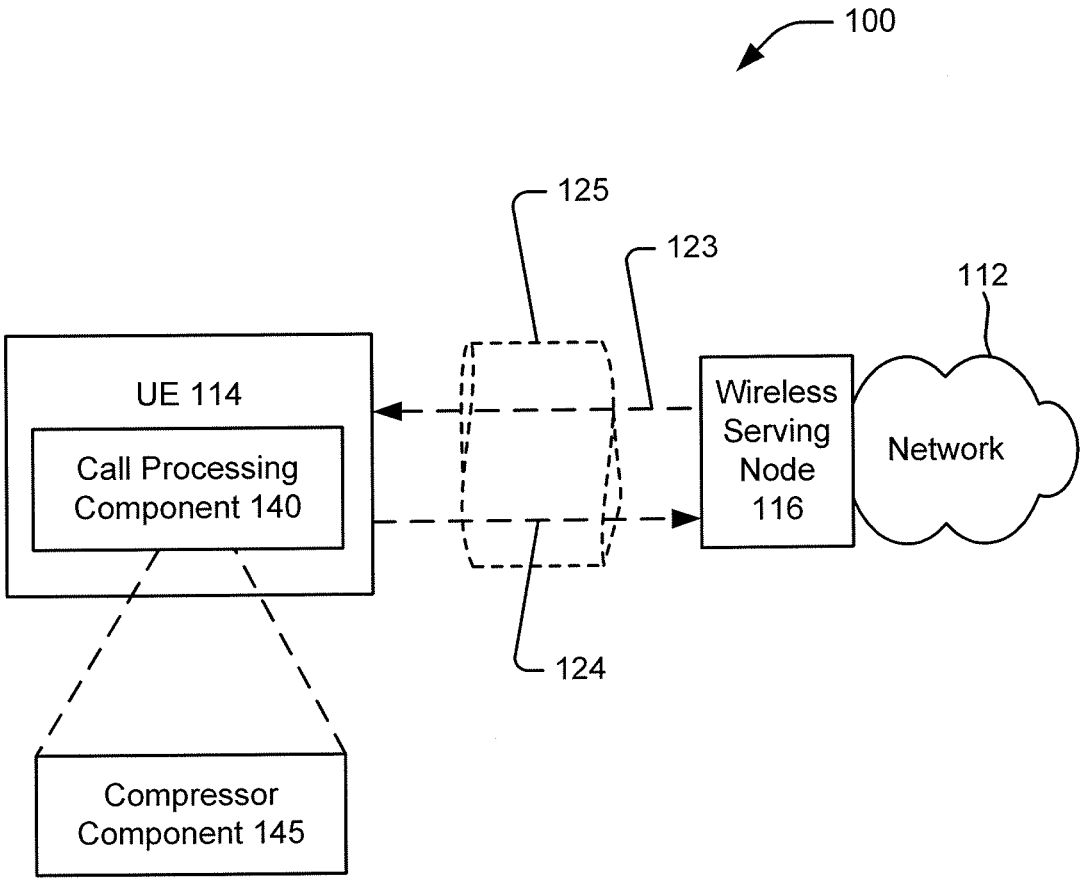
100
125
123
112
UE 114
Call Processing Component 140
Wireless Serving Node 116
Network
124
Compressor Component 145

FIG. 1

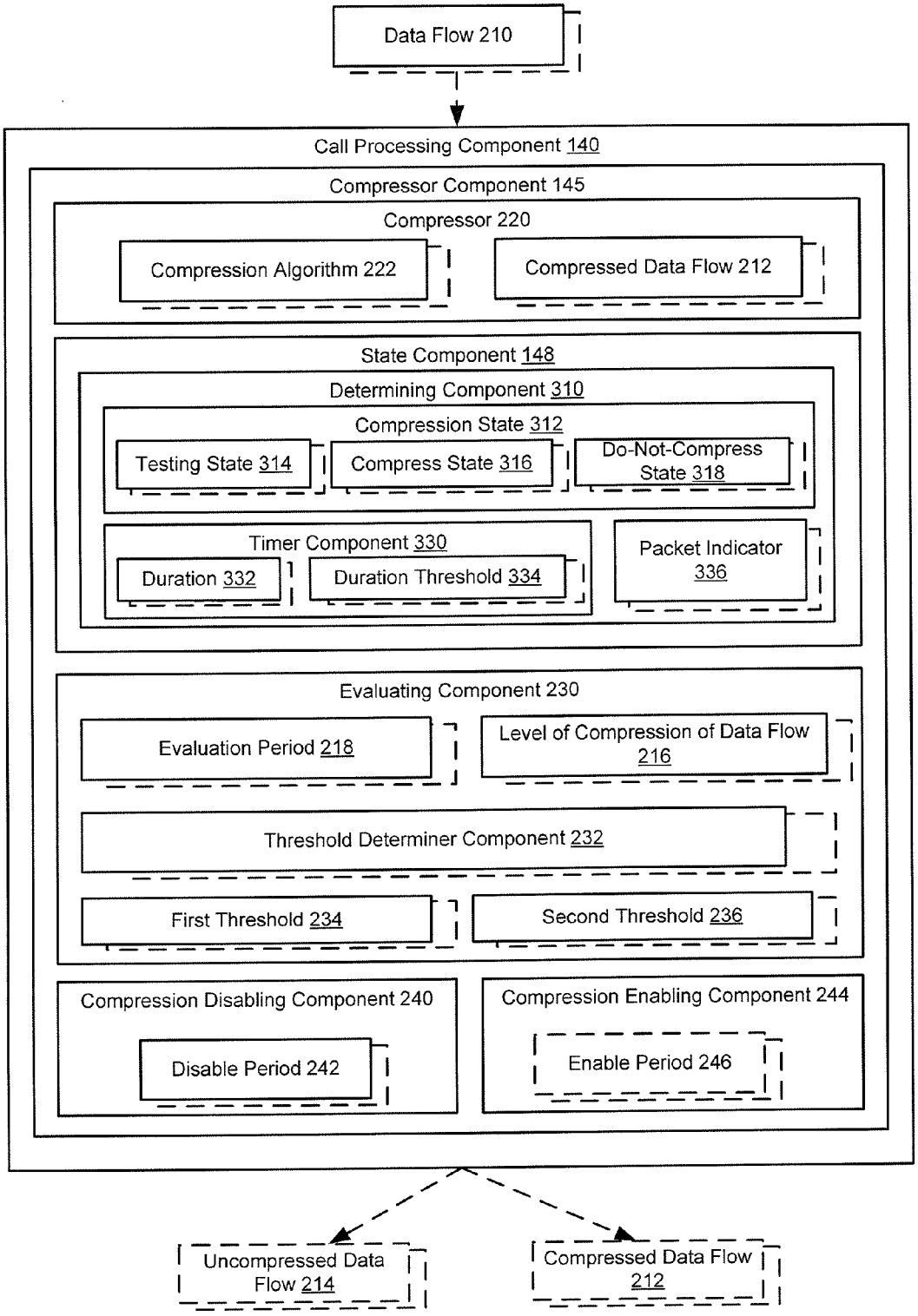
Data Flow 210
Call Processing Component 140
Compressor Component 145
Compressor 220
Compression Algorithm 222
Compressed Data Flow 212
State Component 148
Determining Component 310
Compression State 312
Testing State 314
Compress State 316
Do-Not-Compress State 318
Timer Component 330
Duration 332
Duration Threshold 334
Packet Indicator 336
Evaluating Component 230
Evaluation Period 218
Level of Compression of Data Flow 216
Threshold Determiner Component 232
First Threshold 234
Second Threshold 236
Compression Disabling Component 240
Disable Period 242
Compression Enabling Component 244
Enable Period 246
Uncompressed Data Flow 214
Compressed Data Flow 212

FIG. 2

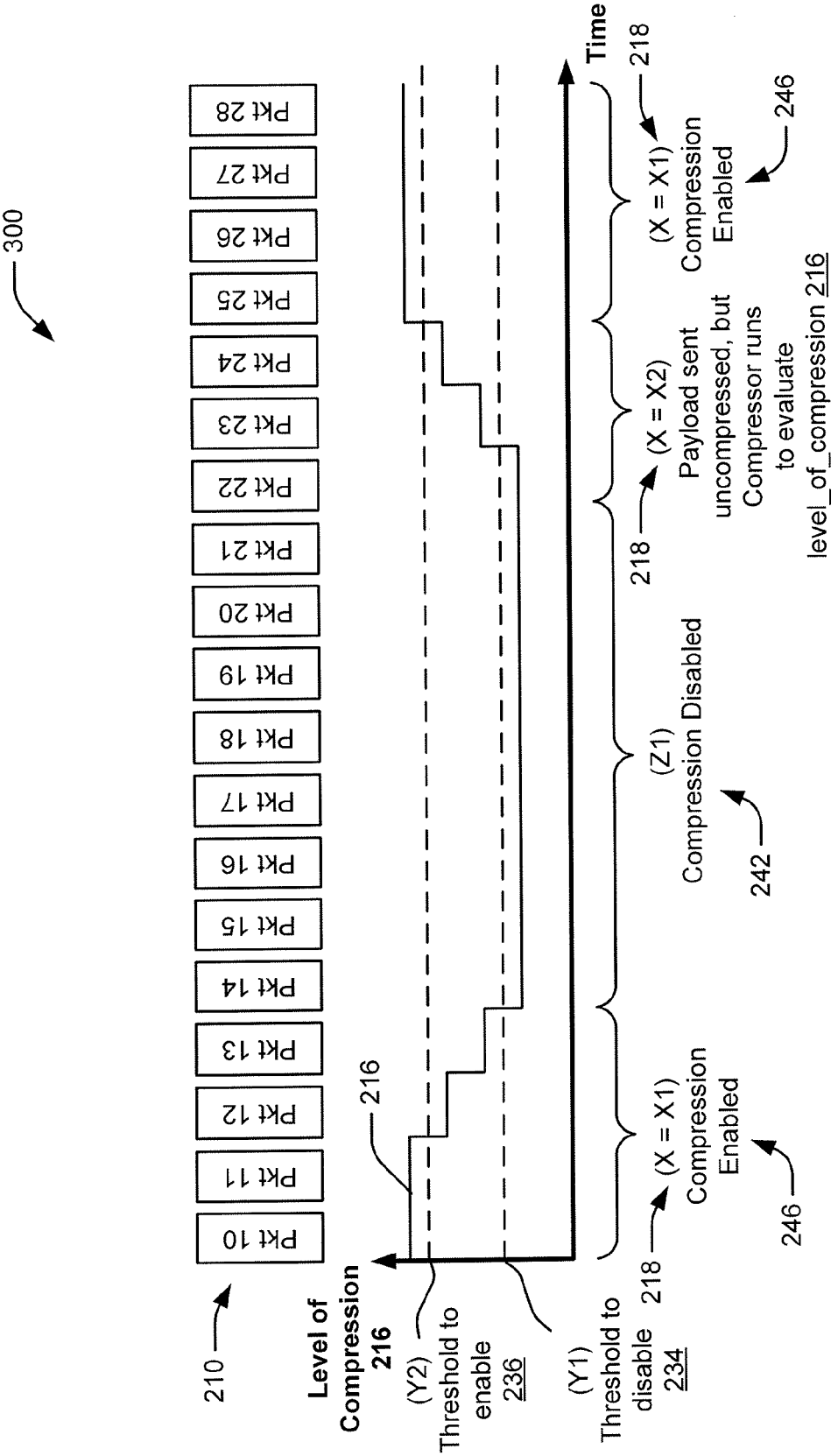
300
Pkt 10
Pkt 11
Pkt 12
Pkt 13
Pkt 14
Pkt 15
Pkt 16
Pkt 17
Pkt 18
Pkt 19
Pkt 20
Pkt 21
Pkt 22
Pkt 23
Pkt 24
Pkt 25
Pkt 26
Pkt 27
Pkt 28
210
Level of Compression 216
216
(Y2) Threshold to enable 236
(Y1) Threshold to disable 234
218
(X = X1) Compression Enabled
246
(Z1) Compression Disabled
242
218
(X = X2) Payload sent uncompressed, but Compressor runs to evaluate level_of_compression 216
Time
218
(X = X1) Compression Enabled
246

FIG. 3A

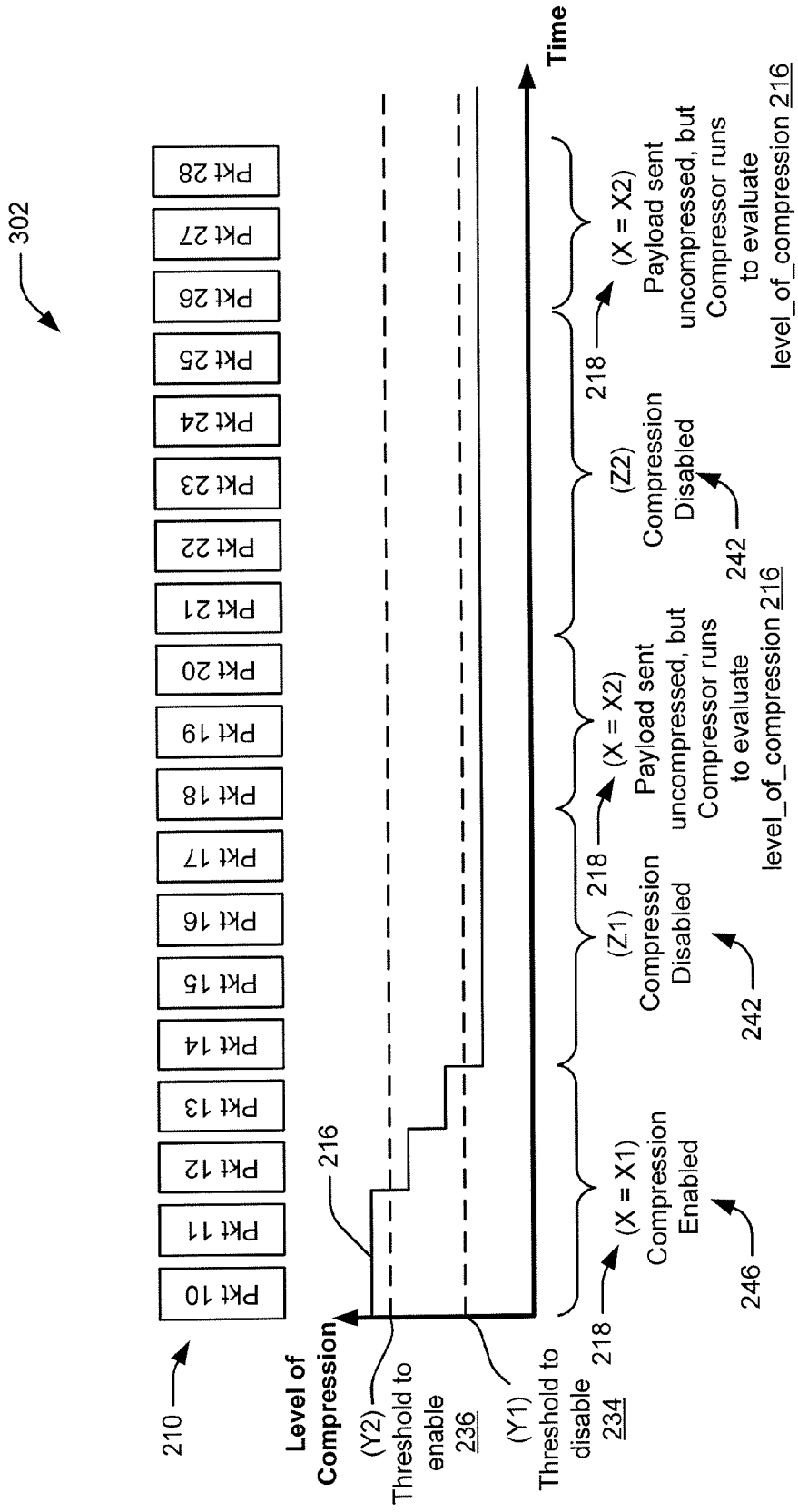
302
Pkt 28
Pkt 27
Pkt 26
Pkt 25
Pkt 24
Pkt 23
Pkt 22
Pkt 21
Pkt 20
Pkt 19
Pkt 18
Pkt 17
Pkt 16
Pkt 15
Pkt 14
Pkt 13
Pkt 12
Pkt 11
Pkt 10
210
Level of Compression
216
(Y2) Threshold to enable 236
(Y1) Threshold to disable 234
Time
218
(X = X1) Compression Enabled
246
218
(Z1) Compression Disabled
242
218
(X = X2) Payload sent uncompressed, but Compressor runs to evaluate level_of_compression 216
242
218
(Z2) Compression Disabled
218
(X = X2) Payload sent uncompressed, but Compressor runs to evaluate level_of_compression 216

FIG. 3B

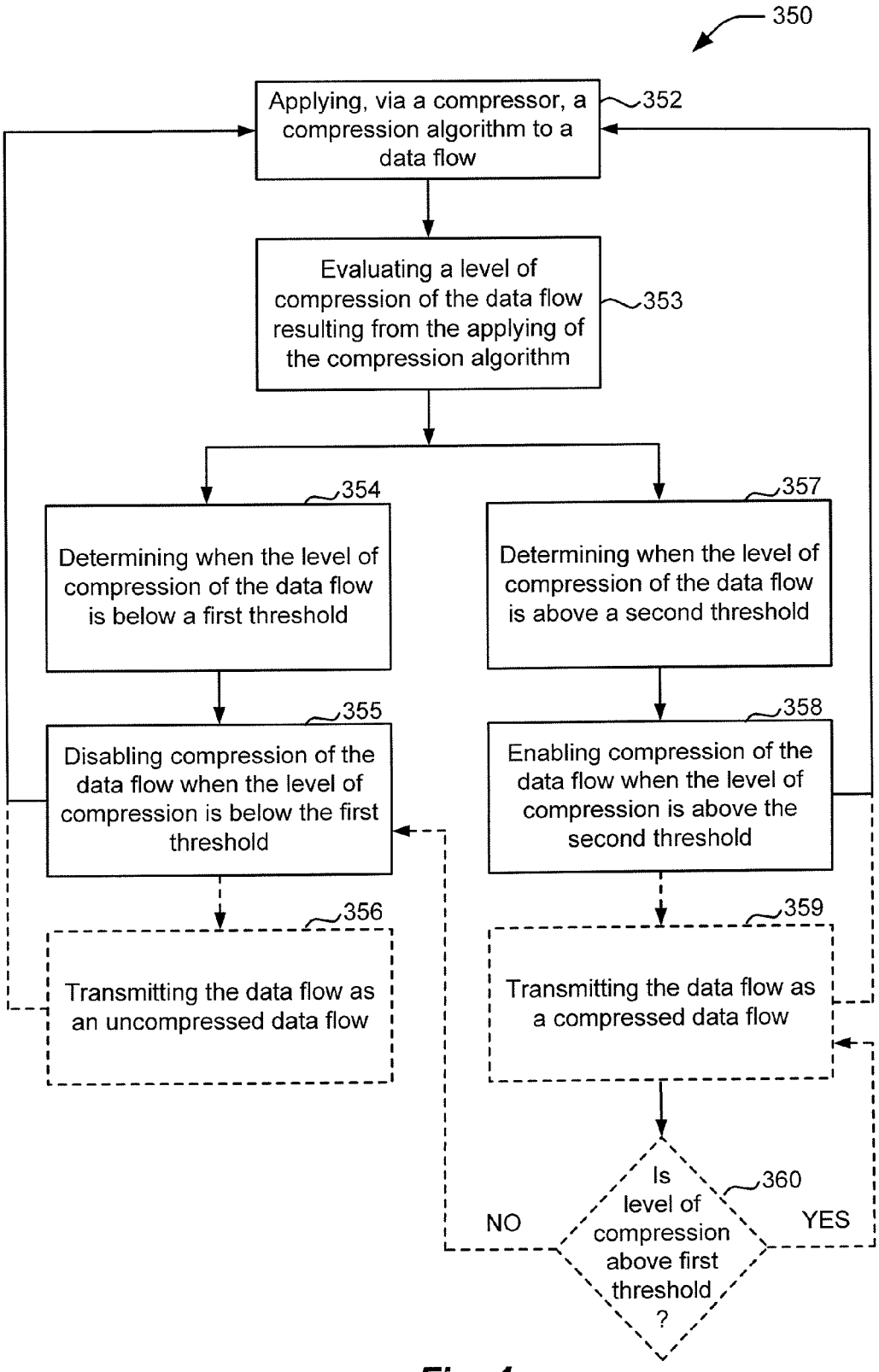
350
Applying, via a compressor, a compression algorithm to a data flow
352
Evaluating a level of compression of the data flow resulting from the applying of the compression algorithm
353
354
Determining when the level of compression of the data flow is below a first threshold
357
Determining when the level of compression of the data flow is above a second threshold
355
Disabling compression of the data flow when the level of compression is below the first threshold
358
Enabling compression of the data flow when the level of compression is above the second threshold
356
Transmitting the data flow as an uncompressed data flow
359
Transmitting the data flow as a compressed data flow
Is level of compression above first threshold ?
360
NO
YES

Fig. 4

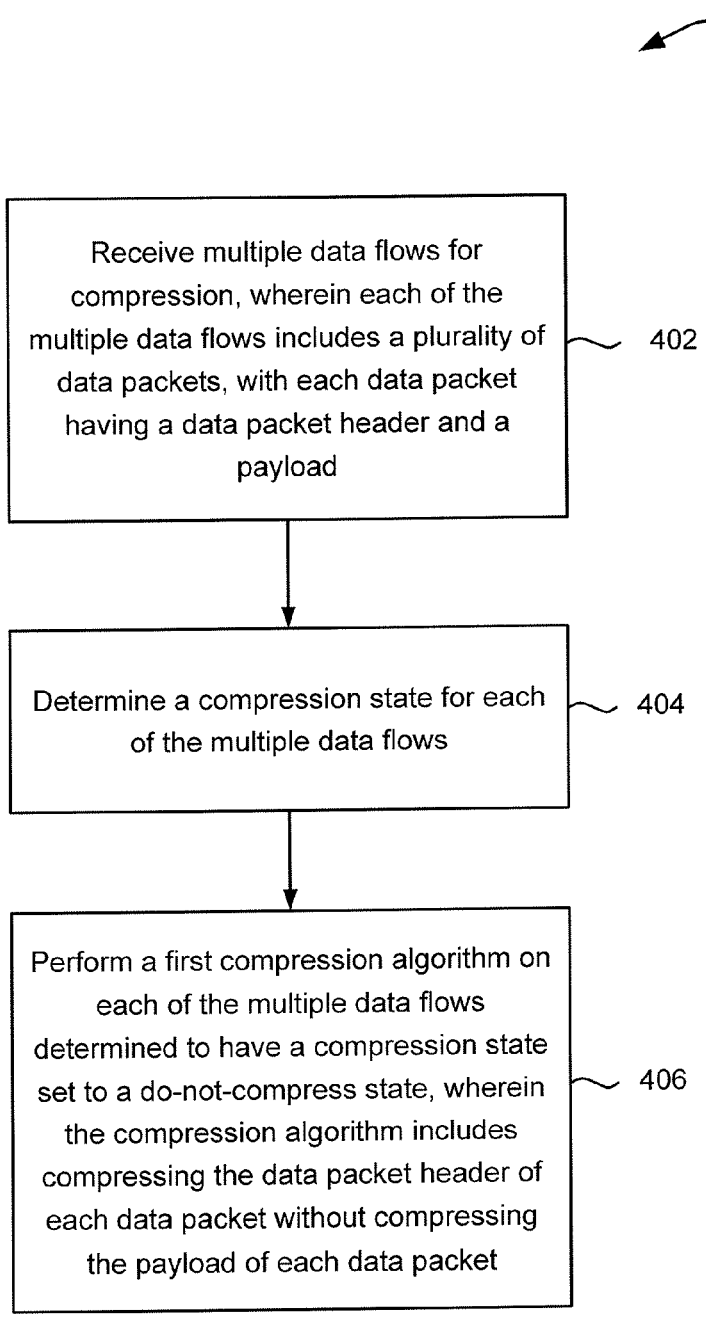
400
Receive multiple data flows for compression, wherein each of the multiple data flows includes a plurality of data packets, with each data packet having a data packet header and a payload
402
Determine a compression state for each of the multiple data flows
404
Perform a first compression algorithm on each of the multiple data flows determined to have a compression state set to a do-not-compress state, wherein the compression algorithm includes compressing the data packet header of each data packet without compressing the payload of each data packet
406

Fig. 5A

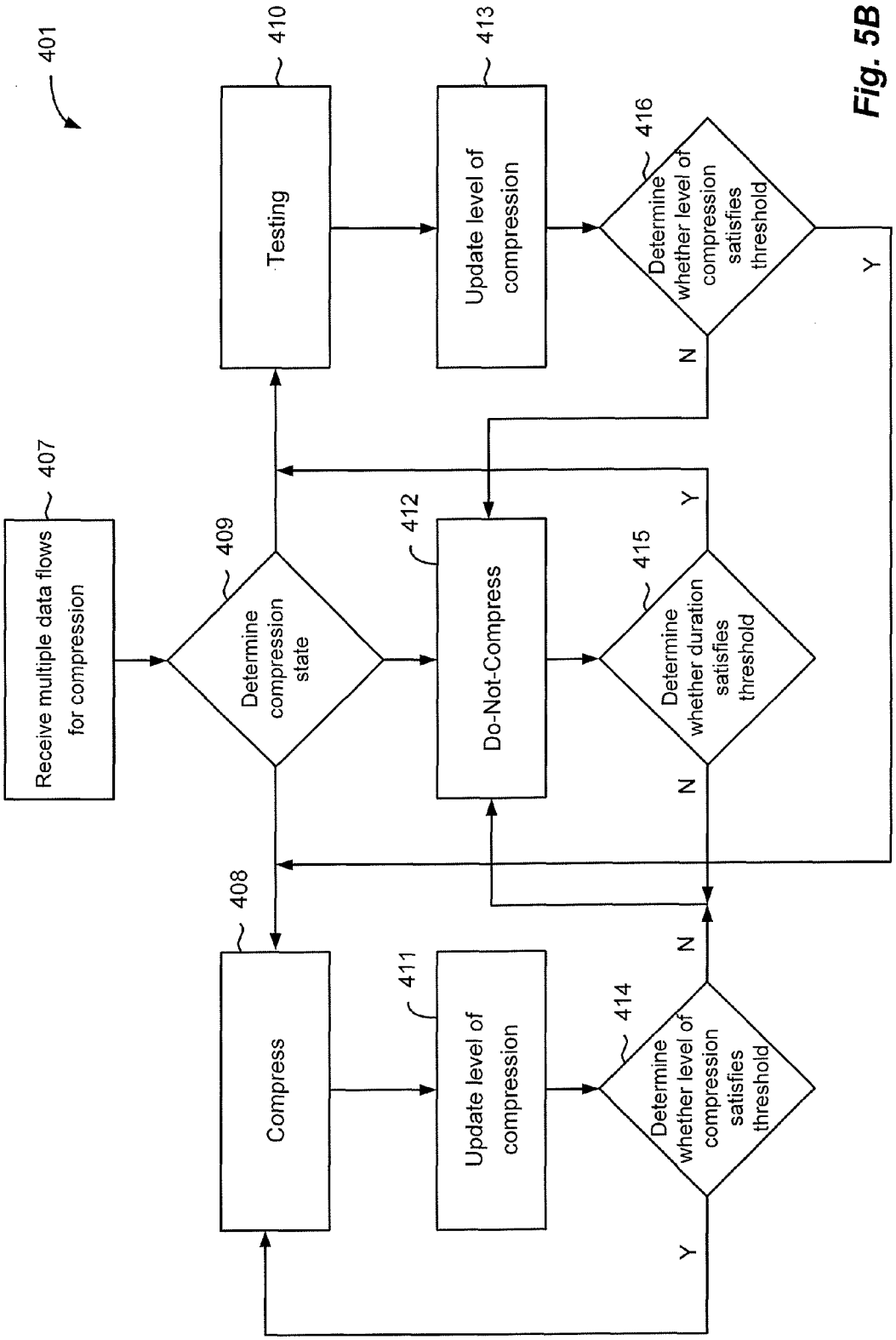
401
Receive multiple data flows for compression
407
Determine compression state
409
Compress
408
Do-Not-Compress
412
Testing
410
Update level of compression
411
Update level of compression
413
Determine whether duration satisfies threshold
415
Determine whether level of compression satisfies threshold
414
Determine whether level of compression satisfies threshold
416
N
Y
N
Y
N
Y

Fig. 5B

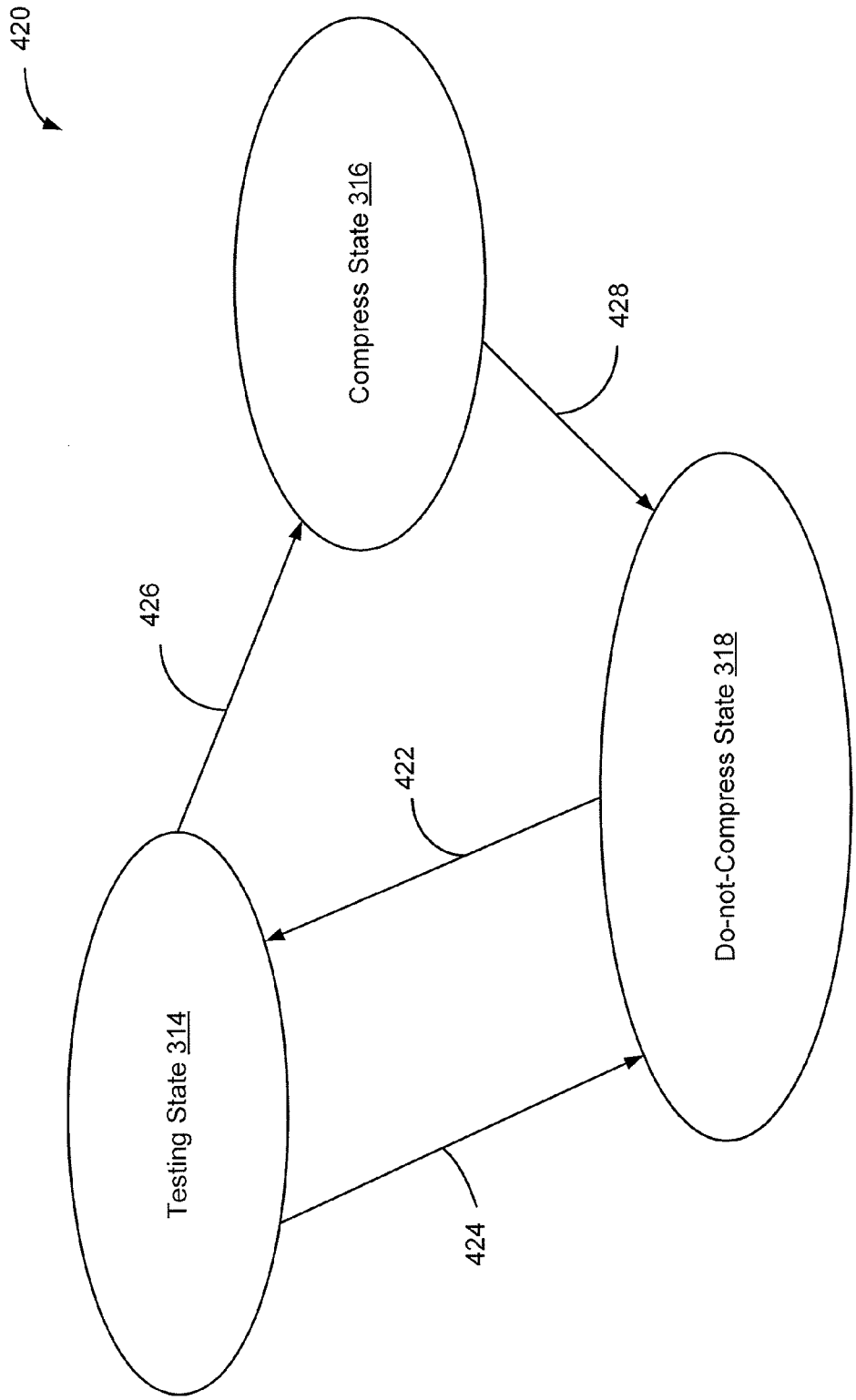
420
Compress State 316
428
Do-not-Compress State 318
426
422
Testing State 314
424

Fig. 6A

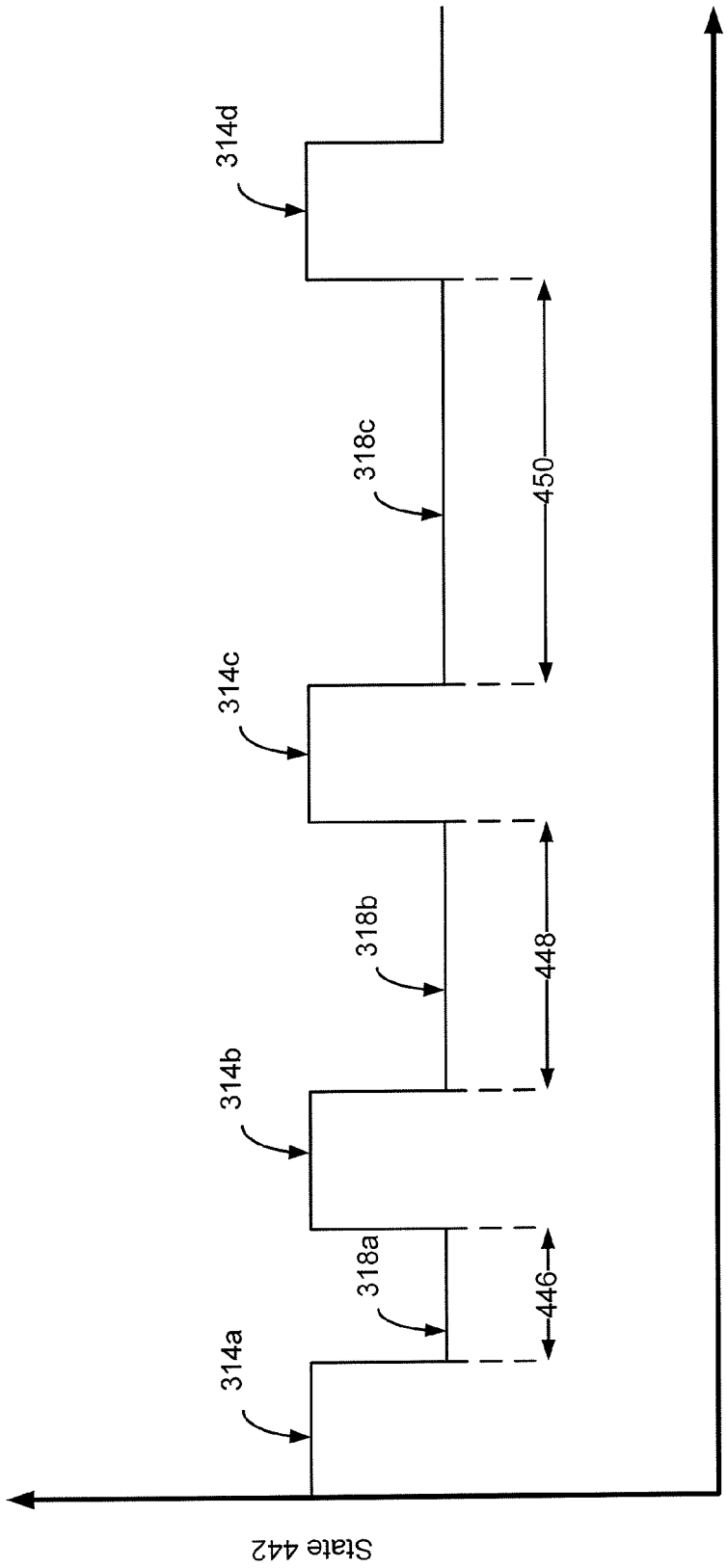
440
314d
318c
450
314c
318b
448
314b
318a
446
314a
State 442
Time 444

Fig. 6B

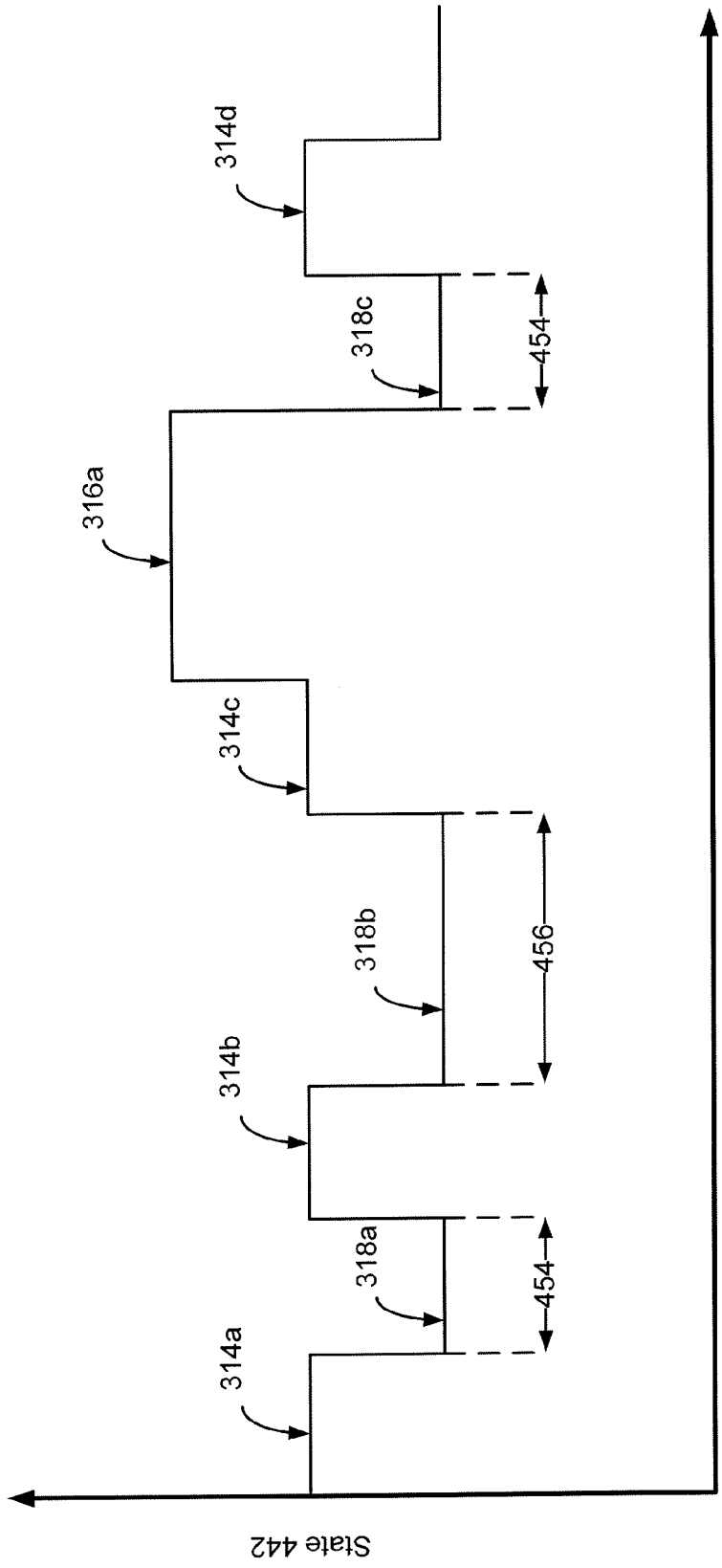
452
314d
318c
454
316a
314c
318b
456
314b
318a
454
314a
State 442
Time 444

Fig. 6C

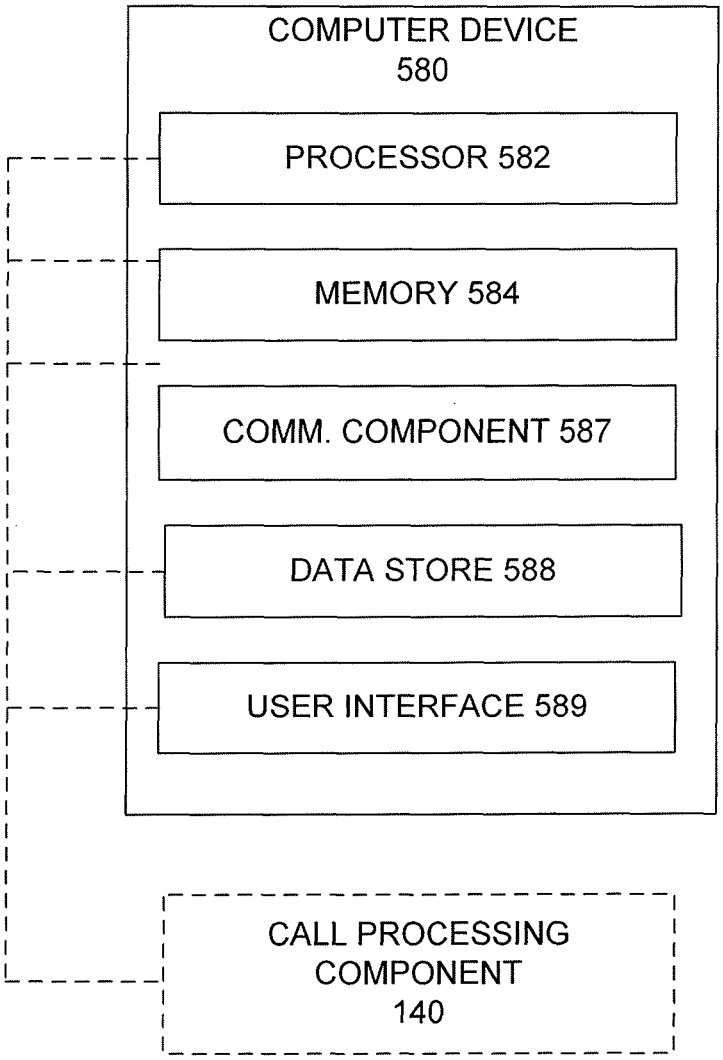
COMPUTER DEVICE
580
PROCESSOR 582
MEMORY 584
COMM. COMPONENT 587
DATA STORE 588
USER INTERFACE 589
CALL PROCESSING
COMPONENT
140

FIG. 7

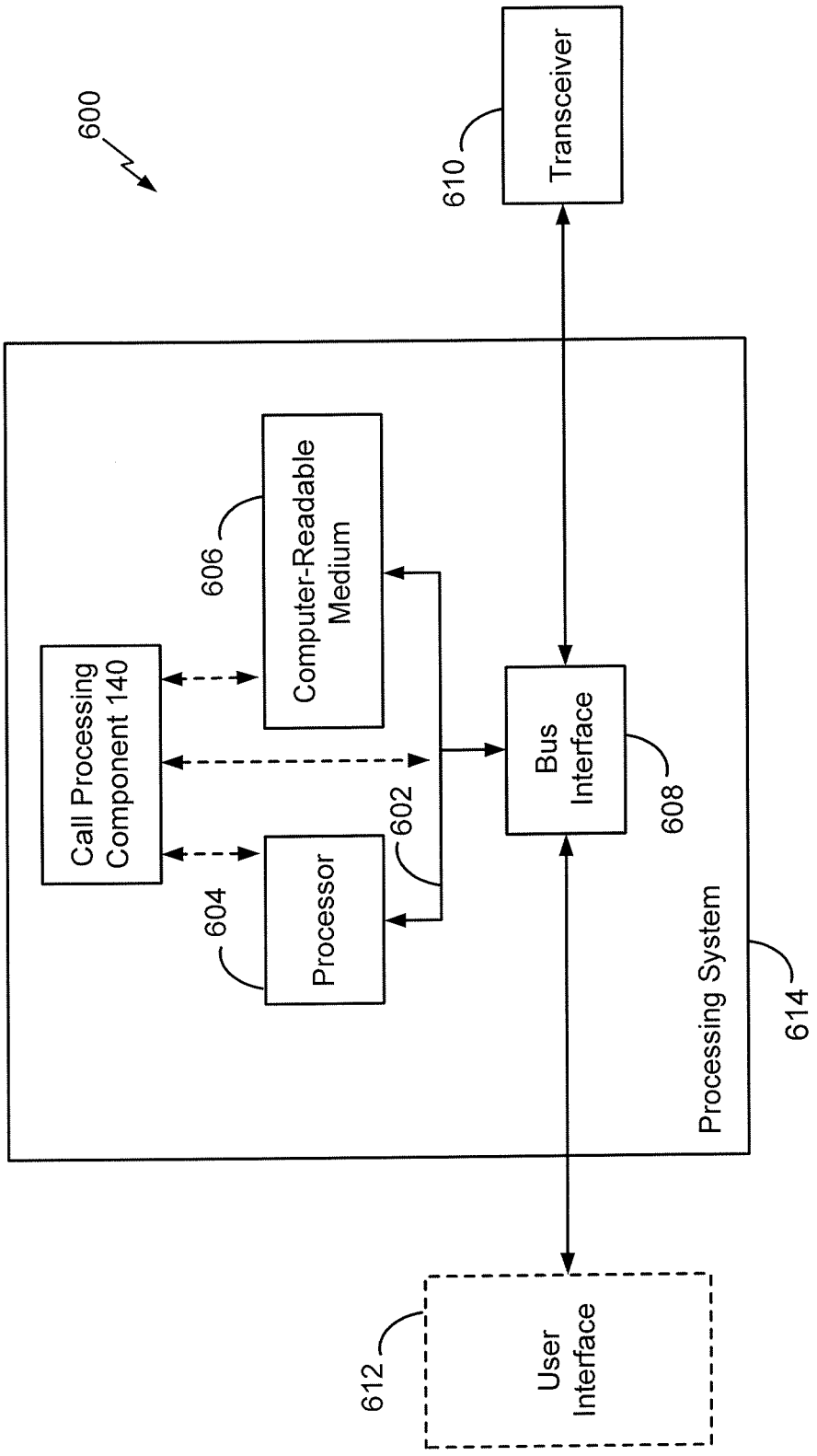
600
610
Transceiver
606
Computer-Readable Medium
Call Processing Component 140
Bus Interface
608
602
604
Processor
Processing System
614
612
User Interface

FIG. 8

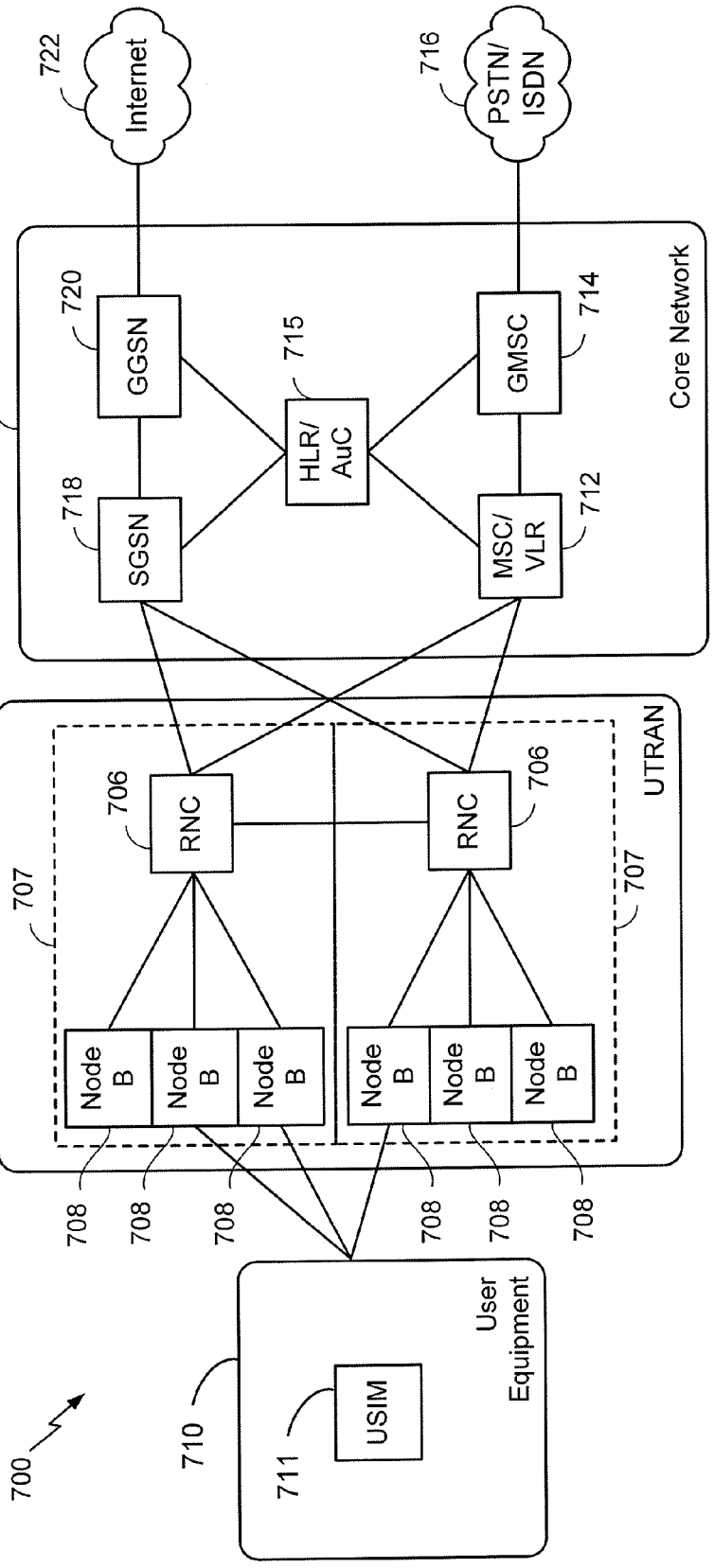
700
710
711
USIM
User Equipment
702
707
706
RNC
Node B
708
UTRAN
704
720
GGSN
718
SGSN
715
HLR/ AuC
714
GMSC
712
MSC/ VLR
Core Network
722
Internet
716
PSTN/ ISDN

FIG. 9

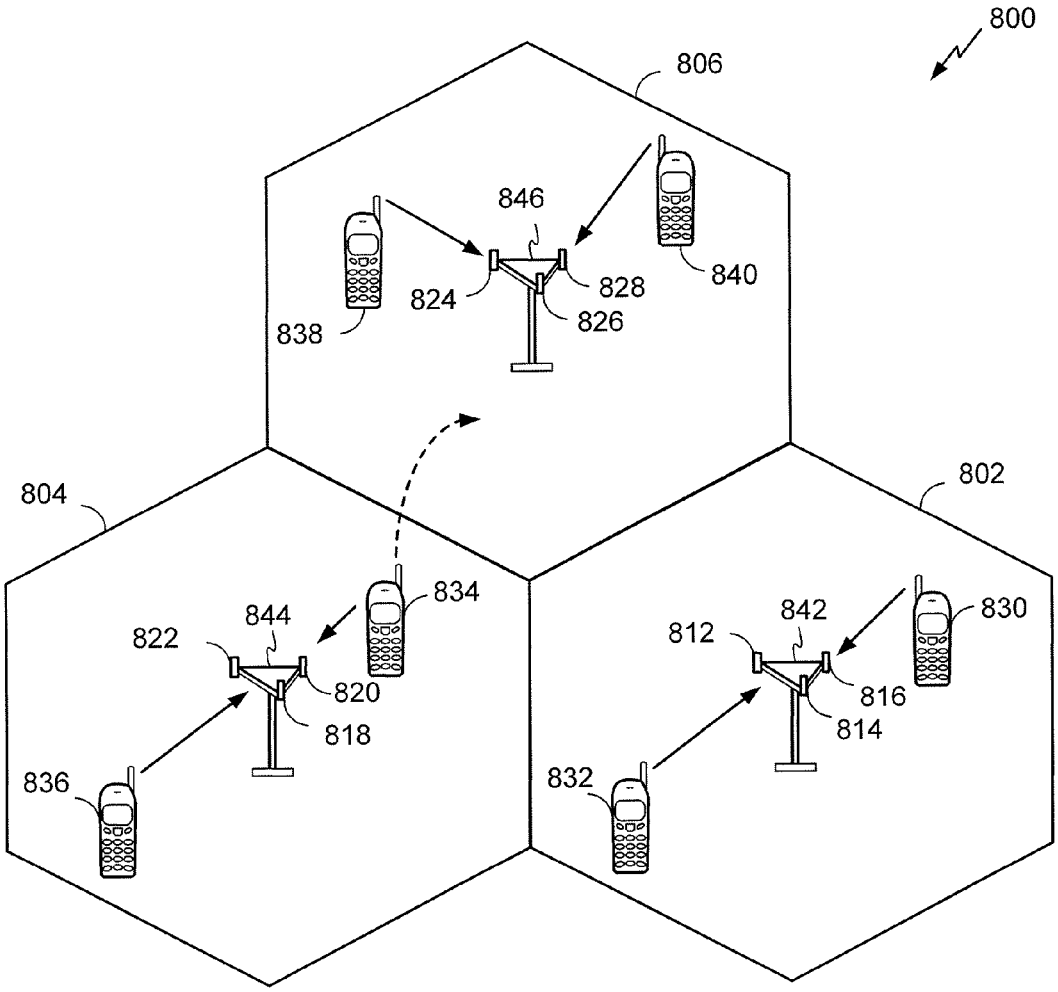
800
806
846
824
828
826
838
840
804
802
822
844
834
820
818
836
812
842
830
816
814
832

FIG. 10

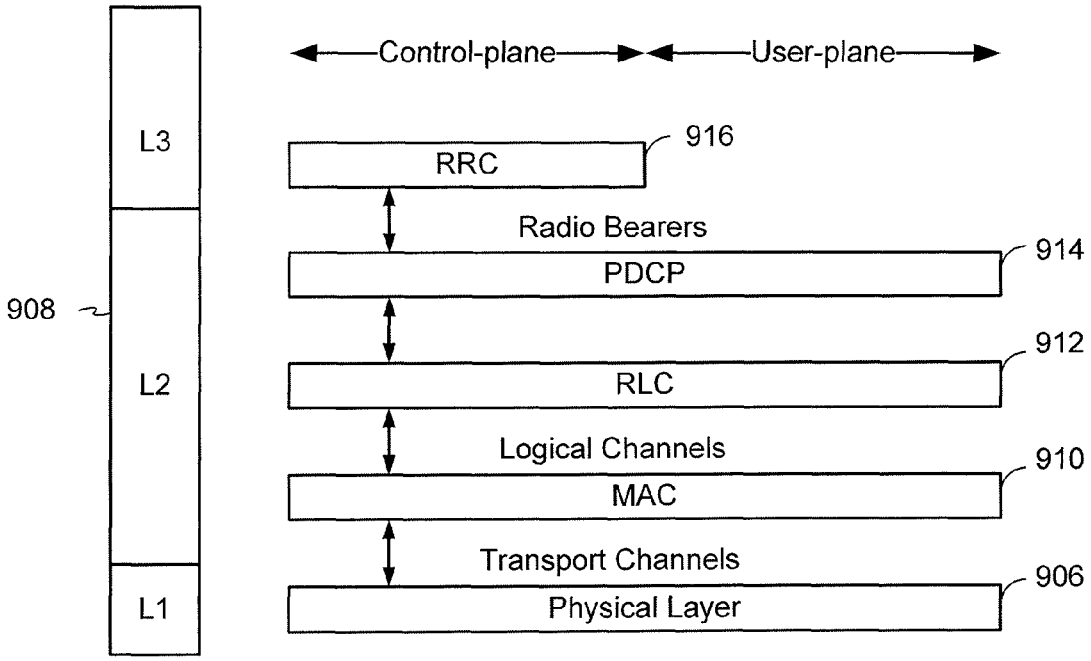
Control-plane
User-plane
L3
L2
L1
908
RRC
916
Radio Bearers
PDCP
914
RLC
912
Logical Channels
MAC
910
Transport Channels
Physical Layer
906

FIG. 11

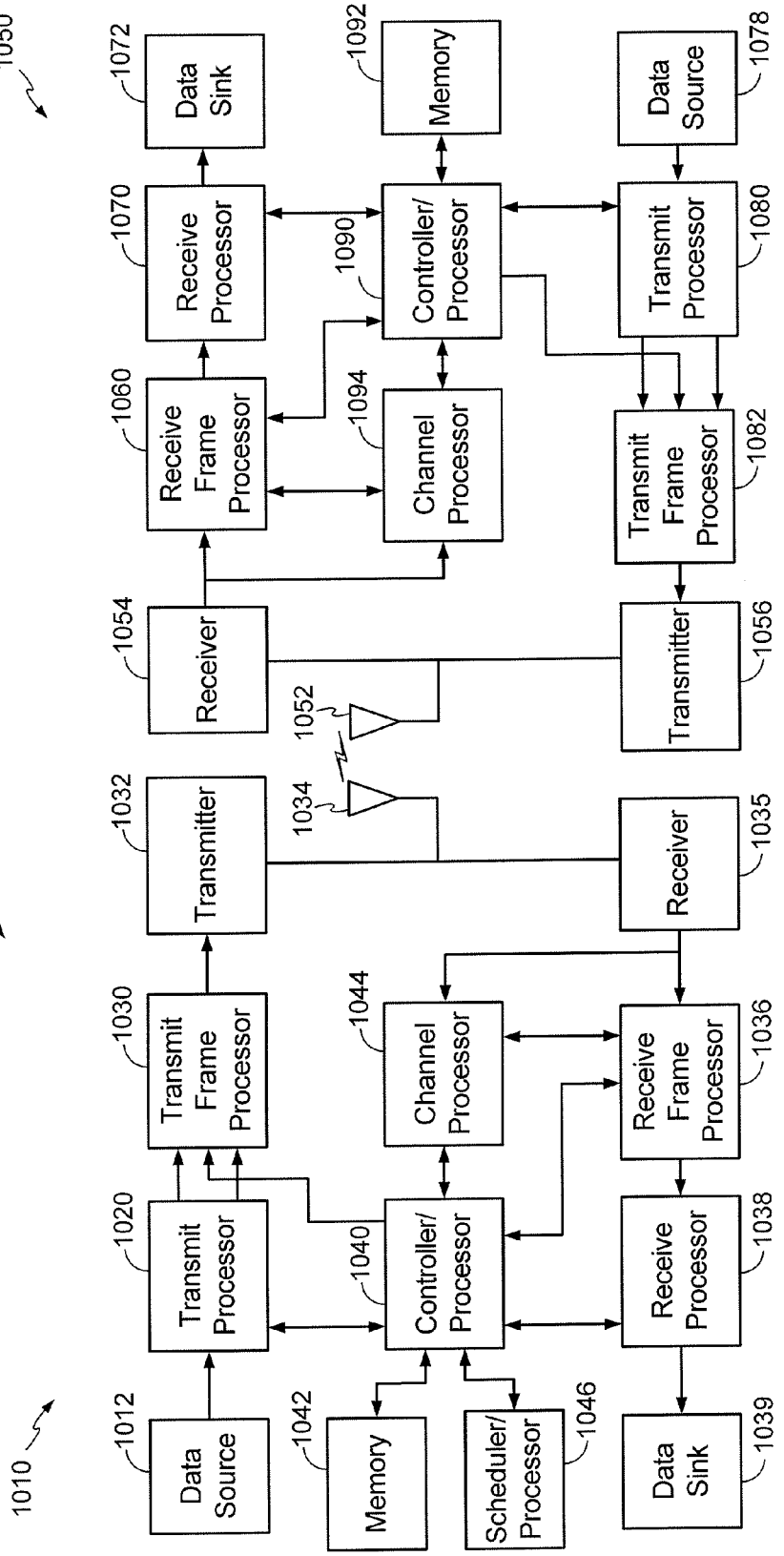
1050
1072
Data Sink
1092
Memory
1078
Data Source
1070
Receive Processor
1090
Controller/ Processor
1080
Transmit Processor
1060
Receive Frame Processor
1094
Channel Processor
1082
Transmit Frame Processor
1054
Receiver
1052
1056
Transmitter
1000
1032
Transmitter
1034
1035
Receiver
1030
Transmit Frame Processor
1044
Channel Processor
1036
Receive Frame Processor
1020
Transmit Processor
1040
Controller/ Processor
1038
Receive Processor
1010
1012
Data Source
1042
Memory
1046
Scheduler/ Processor
1039
Data Sink

FIG. 12

HANDLING INCOMPRESSIBLE DATA PACKETS ON MULTIPLE DATA FLOWS

CROSS-REFERENCE TO RELATED APPLICATIONS

The present application for patent claims priority to Provisional Application No. 61/881,134 entitled "HANDLING INCOMPRESSIBLE FLOWS" filed Sep. 23, 2013. It is noted that the above application is assigned to the assignee hereof, and that Provisional Application No. 61/881,134 is hereby expressly incorporated by reference herein.

BACKGROUND

Aspects of the present disclosure relate generally to wireless communication systems, and more particularly, to an apparatus and method for improving the utilization of processing resources during compression of packetized data flows, thereby providing consistent service in a wireless communication system.

Wireless communication networks are widely deployed to provide various communication services such as telephony, video, data, messaging, broadcasts, and so on. Such networks, which are usually multiple access networks, support communications for multiple users by sharing the available network resources. One example of such a network is the UMTS Terrestrial Radio Access Network (UTRAN). The UTRAN is the radio access network (RAN) defined as a part of the Universal Mobile Telecommunications System (UMTS), a third generation (3G) mobile phone technology supported by the 3rd Generation Partnership Project (3GPP). The UMTS, which is the successor to Global System for Mobile Communications (GSM) technologies, currently supports various air interface standards, such as Wideband-Code Division Multiple Access (W-CDMA), Time Division-Code Division Multiple Access (TD-CDMA), and Time Division-Synchronous Code Division Multiple Access (TD-SCDMA). The UMTS also supports enhanced 3G data communications protocols, such as High Speed Packet Access (HSPA), which provides higher data transfer speeds and capacity to associated UMTS networks.

In some wireless communications systems, a compressor may compress data packets by utilizing a compression algorithm. In some cases, however, the compressor may attempt to compress data packets from certain flows that may not be compressible or that may provide little or no gain (e.g., reduction in packet size) from compression, thereby wasting processing resources.

Thus, improving the utilization of processing resources during compression of packet data flows is desired.

SUMMARY

The following presents a simplified summary of one or more aspects in order to provide a basic understanding of such aspects. This summary is not an extensive overview of all contemplated aspects, and is intended to neither identify key or critical elements of all aspects nor delineate the scope of any or all aspects. Its sole purpose is to present some concepts of one or more aspects in a simplified form as a prelude to the more detailed description that is presented later.

In an aspect, a method of compression on multiple data flows for communication between a user equipment (UE) and a serving node is described. The method includes receiving multiple data flows for compression, wherein each of the multiple data flows includes a plurality of data packets, with each data packet having a data packet header and a payload. Further, the method includes determining a compression state for each of the multiple data flows. Moreover, the method includes performing a first compression algorithm on each of the multiple data flows determined to have a compression state set to a do-not-compress state, wherein the first compression algorithm includes compressing the data packet header of each data packet without compressing the payload of each data packet.

In another aspect, an apparatus of compression on multiple data flows for communication between a user equipment (UE) and a serving node is described. The apparatus includes a means for receiving multiple data flows for compression, wherein each of the multiple data flows includes a plurality of data packets, with each data packet having a data packet header and a payload. Further, the apparatus includes a means for determining a compression state for each of the multiple data flows. Moreover, the apparatus includes a means for performing a first compression algorithm on each of the multiple data flows determined to have a compression state set to a do-not-compress state, wherein the first compression algorithm includes compressing the data packet header of each data packet without compressing the payload of each data packet.

In another aspect, an apparatus for compression on multiple data flows for communication between a user equipment (UE) and a serving node is described. The apparatus includes a call processing component configured to receive multiple data flows for compression, wherein each of the multiple data flows includes a plurality of data packets, with each data packet having a data packet header and a payload. Further, the apparatus includes a determining component configured to determine a compression state for each of the multiple data flows. Moreover, the apparatus includes a compressor component configured to perform a first compression algorithm on each of the multiple data flows determined to have a compression state set to a do-not-compress state, wherein the first compression algorithm includes compressing the data packet header of each data packet without compressing the payload of each data packet.

In yet another aspect, a non-transitory computer-readable media executable by an apparatus for wireless communication for compression on multiple data flows for communication between a user equipment (UE) and a serving node is described. The computer-readable media includes code for receiving multiple data flows for compression, wherein each of the multiple data flows includes a plurality of data packets, with each data packet having a data packet header and a payload. Further, the computer-readable media includes code for determining a compression state for each of the multiple data flows. Moreover, the computer-readable media includes code for performing a first compression algorithm on each of the multiple data flows determined to have a compression state set to a do-not-compress state, wherein the first compression algorithm includes compressing the data packet header of each data packet without compressing the payload of each data packet.

These and other aspects of the disclosure will become more fully understood upon a review of the detailed description, which follows.

BRIEF DESCRIPTION OF THE DRAWINGS

FIG. **1** is a schematic diagram of an aspect of a call processing component used in a wireless communication system;

FIG. **2** is a schematic diagram of an aspect of a compressor component of the call processing component of FIG. **1**;

FIG. **3**A is a graphical representation of an aspect of call processing in the wireless communication system of the present disclosure;

FIG. **3**B is a graphical representation of other aspect of call processing in the wireless communication system of the present disclosure;

FIG. **4** is a flow diagram of one aspect of a method for call processing in the wireless communication system of the present disclosure;

FIGS. **5**A and **5**B are flow diagrams illustrating exemplary methods for call processing in a wireless communication system;

FIGS. **6**A-**6**C are conceptual diagrams illustrating aspects of the present disclosure;

FIG. **7** is a block diagram of one aspect of additional components of a computer device implementing a call processing component according to the present disclosure;

FIG. **8** is a block diagram of an aspect of a hardware implementation for an apparatus employing a processing system to perform the functions described herein;

FIG. **9** is a block diagram conceptually illustrating an example of a telecommunications system including a UE configured to perform the functions described herein;

FIG. **10** is a conceptual diagram illustrating an example of an access network for use with a UE configured to perform the functions described herein;

FIG. **11** is a conceptual diagram illustrating an example of a radio protocol architecture for the user and control planes for a base station and/or a UE configured to perform the functions described herein; and

FIG. **12** is a block diagram conceptually illustrating an example of a Node B in communication with a UE in a telecommunications system configured to perform the functions described herein.

DETAILED DESCRIPTION

The detailed description set forth below in connection with the appended drawings is intended as a description of various configurations and is not intended to represent the only configurations in which the concepts described herein may be practiced. The detailed description includes specific details for the purpose of providing a thorough understanding of various concepts. However, it will be apparent to those skilled in the art that these concepts may be practiced without these specific details. In some instances, well known structures and components are shown in block diagram form in order to avoid obscuring such concepts.

As discussed above, a compressor may be used to compress data packets in a data packet flow by taking advantage of redundancies across the data packets. In doing so, the compressor may attempt to compress data packets from certain flows that may be considered incompressible. As used herein, the term "incompressible" when used relative to a data packet flow means not able to be compressed or providing less than a threshold amount of gain (e.g., reduction in packet size) from compression. Examples of types of packet data flows that may be considered incompressible include, but are not limited to, packet data flows carrying data such as encrypted traffic or video. As such, the compressor ends up spending processing resources attempting to compress data packets that provide little or no reduction in packet size. Likewise a de-compressor may also waste processing resources on attempting to decompress data packets that have not been reduced in size.

The present aspects generally relate to efficiently handling incompressible data packets on multiple data flows. Specifically, the present apparatus and methods track each data flow and have states for each flow, where the states specify if compression is on or off.

Accordingly, in some aspects, the present methods and apparatuses may provide an efficient solution, as compared to current solutions, by tracking incompressible data packets on multiple data flows in a wireless communication network in order to efficiently compress data packets.

Referring to FIG. **1**, in one aspect, a wireless communication system **100** is configured to facilitate transmitting vast amount of data from a mobile device to a network, or vice versa. Wireless communication system **100** includes at least one UE (user equipment) **114** that may communicate wirelessly with one or more networks **112** via serving nodes, including, but not limited to, wireless serving node **116**, over one or more wireless link **125**. The one or more wireless link **125** may include, but are not limited to, signaling radio bearers and/or data radio bearers. Wireless serving node **116** may be configured to transmit one or more signals **123** to UE **114** over the one or more wireless link **125**, and/or UE **114** may transmit one or more signals **124** to wireless serving node **116**. In an aspect, signal **123** and signal **124** may include, but are not limited to, one or more messages, such as transmitting a data packet or a packet data flow from the UE **114** to the network **112** via wireless serving node **116**.

In an aspect, UE **114** may include a call processing component **140**, which may be configured to transmit data to the wireless serving node **116** over wireless link **125**. For example, call processing component **140** may transmit data packets from one or more packet data flows corresponding to one or more applications executing on UE **114**. For instance, the one or more applications may include one or more of a web browser application, a data call application, and a voice call application.

According to the present aspects, call processing component **140** may include a compressor component **145** configured to selectively compress or not compress one or more packet data flows based on a level of compression that may be achieved. In particular, compressor component **145** may be configured with respective threshold levels of compression that dictate enabling or disabling compression of one or more packet data flows. Moreover, in an aspect, compressor component **145** may be configured with one or more disable periods during which compression in disabled. In the aspect of more than one disable period, each disable period may have a different duration, or each disable period may have a duration based on a number of consecutive times the level of compression has failed to meet the respective threshold to enable compression. For example, in one aspect that should not be construed as limiting, compressor component **145** may be configured with the respective enable and disable thresholds, and the respective disable periods, in order to improve the efficiency of use of the processing resources for performing compression. For instance, rather than turning compressor component **145** on and off at every opportunity for a small compression gain, the present aspects may configure compressor component **145** to avoid transmitting a compressed data flow until a sufficient compression gain may be achieved, or until compressor component **145** may enable compression for a sufficient period of time until reaching the disable threshold to justify use of the processing resources for compression.

In an aspect, for example, call processing component **140** and compressor component **145** of UE **114** may be an entity operating at a protocol layer in a protocol stack of UE **114**. An

example protocol layer that may include an entity operating the present aspects may include, but is not limited to, a Packet Data Convergence Protocol (PDCP) layer, however, as noted, the present aspects may operate at higher or lower layers of the protocol stack.

UE **114** may include a mobile apparatus and may be referred to as such throughout the present disclosure. Such a mobile apparatus or UE **114** may also be referred to by those skilled in the art as a mobile station, a subscriber station, a mobile unit, a subscriber unit, a wireless unit, a remote unit, a mobile device, a wireless device, a wireless communications device, a remote device, a mobile subscriber station, an access terminal, a mobile terminal, a wireless terminal, a remote terminal, a handset, a terminal, a user agent, a mobile client, a client, or some other suitable terminology.

Additionally, the one or more wireless nodes, including, but not limited to, wireless serving node **116** of wireless communication system **100**, may include one or more of any type of network component, such as an access point, including a base station or node B, a relay, a peer-to-peer device, an authentication, authorization and accounting (AAA) server, a mobile switching center (MSC), a radio network controller (RNC), etc. In a further aspect, the one or more wireless serving nodes of wireless communication system **100** may include one or more small base stations, such as, but not limited to a femtocell, picocell, microcell, or any other small base station.

Referring to FIG. **2**, in one aspect of the present apparatus and method, compressor component **145** may include a plurality of sub-components for performing the functions of the present aspects in order to selectively generate a compressed data flow **212** or an uncompressed data flow **214** from a received data flow **210** based on a level of compression **216** that may be achieved.

In an aspect, compressor component **145** may be configured to include, among other things, a compressor **220** capable of applying a compression algorithm **222** to one or more data flows **210**. For example, after compressor component **145** receives data flow **210**, e.g., carrying data or signaling corresponding to an application such as a browser executing on UE **114** (FIG. **1**), from a higher protocol layer, compressor **220** is configured to apply compression algorithm **222** to at least a portion of data flow **210** to generate a compressed data flow **212** having an amount of data that may be smaller than or equal to an amount of data of the corresponding portion of the original data flow **210** (which may be referred to as uncompressed data flow **214**). In an example, compression algorithm **222** may be any algorithm capable of reducing a size (e.g., in bits or bytes) of a set of data packets, where, in one aspect, the reduction in size may be in the header (e.g., by eliminating repeated header information). It should be noted, however, that in other alternative or additional aspects, compression algorithm **222** may also operate to reduce a size of payload information in a set of data packets. Further, it should be noted that compressor **220** may generate compressed data flow **212** for only certain portions of data flow **210**, e.g., at a number of intervals, which may include a configured number of data packets, where the intervals or number of data packets may vary depending on whether compressor component **145** has enabled or disabled compressor **220** for actually transmitting data flow **210** (as opposed to generating compressed data flow **212** for evaluation purposes). Thus, generation of compressed data flow **212** may be only for evaluation purposes, as explained below, and compressor component **145** may transmit compressed data flow **212** or uncompressed data flow **214** (e.g., original data flow **210**) based on the operation of the present aspects.

It should be noted that compressor component **145** may identify data flows **210** based on source and/or destination address or port information. In an example, which should not be construed as limiting, compressor component **145** may identify data flows **210** based on one of or any combination of transmission control protocol (TCP) source port, TCP destination port, IP source address, and IP destination address for TCP based packets, and user datagram protocol (UDP) source port, UDP destination port, IP source address, and IP destination address for UDP based packets.

Further, compressor component **145** may be configured to include an evaluating component **230** capable of determining level of compression **216** of compressed data flow **212** resulting from execution of compression algorithm **222** on data flow **210**, e.g., uncompressed data flow **214**. For example, in an aspect, evaluating component **230** is configured to compare a size of compressed data flow **212** relative to a size of the corresponding portion of data flow **210** (or, in other words, uncompressed data flow **214**) and define a metric or value related to the difference in size as level of compression **216** of data flow **210**. In an alternative or additional aspect, evaluating component **230** is configured to define a metric for level of compression **216** based on a number of packets that are compressible at least a defined amount, out of a threshold number of packets. In an aspect, evaluating component **230** keeps track of level of compression **216** of data flow **210** for an evaluation period **218** (e.g., referred to below as X, where X is a positive number), which may include a configured number of data packets, and/or at intervals, where the intervals or number of data packets may vary depending on whether compressor component **145** has enabled (e.g., X=X1) or disabled (e.g., X=X2) compressor **220** for actually transmitting data flow **210** (as opposed to generating compressed data flow **212** for evaluation purposes). For example, in an aspect, evaluation period **218** may be a threshold number of past packets, and upon receiving a new packet for data flow **210**, evaluating component **230** may evaluate level of compression **216** for evaluation period **218**, e.g., the threshold number of past packets in data flow **210**, in order to determine whether or not to compress the new packet.

In an aspect, level of compression **216** may be equivalent to one minus a sum of a payload size of the data flow, after compression, of a threshold number of past data packets (e.g., evaluation period **218**, also referred to below as X, where X is a positive number) in the data flow over the sum of a payload size of the data flow, before compression, of the threshold number of past data packets in the data flow, as represented in equation 1 below. For example, if data flow **210** includes packets having sequence numbers **10** through **28**, and X=3, then level of compression **216** in an initial evaluation period **218** may be computed for data packets having sequence numbers **10**, **11**, and **12**. As noted above, the value of the threshold number of past packets (e.g., X) in the data flow of equation 1 may be dependent on whether compression is enabled (e.g., X=X1) or disabled (e.g., X=X2), as discussed below.

In another aspect, evaluating component **230** may include a threshold determiner component **232** configured to determine whether level of compression **216** meets one or more thresholds having values respectively configured to selectively disable and enable compression of data flow **210**. For example, evaluating component **230** and/or threshold determiner component **232** may include a first threshold **234** (e.g., Y1 in the below equations) for disabling compression and a second threshold **236** (e.g., Y2 in the below equations) for enabling compression, where first threshold **234** has a value different from, and less than, second threshold **236**. For example, in an aspect, threshold determiner component **232**

compares the value of compression **216** to the value of first threshold **234** and the value of second threshold **236**, e.g. to determine if level of compression **216** is below first threshold **234** to trigger disabling of compression or above second threshold **236** to trigger enabling of compression. First threshold **234** and second threshold **236** may be fixed or variable values.

In yet another aspect, compressor component **145** may be configured to include a compression enabling component **244** capable of enabling compression of data flow **210** for transmission when level of compression **216** increases above second threshold **236**. For example, after threshold determiner component **232** determines that the level of compression **216** has increased above second threshold **236**, then compression enabling component **244** enables compression when transmitting data flow **210**. In other words, in this aspect, compressor component **145** transmits data flow **210** as compressed data flow **212** when level of compression **216** meets second threshold **236**, e.g., when sufficient gains can be achieved via compressing data flow **210** relative to the cost of resources used to perform the compression. In an aspect, compression enabling component **244** may include one or more enabling periods **246** that identify an amount of time or a number of packets for which compression will be enabled. The one or more enabling periods **246** may be the same as, or different from, evaluation period **218**. In other words, compression enabling component **244** may enable compression as often as level of compression **216** is evaluated by evaluating component **230**, which may be on a packet-by-packet basis, or compression enabling component **244** may enable compression for a set period of time or a set number of packets without an evaluation of level of compression **216**. As such, in some cases, compression enabling component **244** may continuously trigger compression as long as evaluating component **230** determines that level of compression **216** meets second threshold **236** or is greater than first threshold **234**, depending on whether compression is currently disabled or enabled.

In another aspect, compressor component **145** may be configured to include a compression disabling component **240** capable of disabling compression of data flow **210** for transmission when level of compression **216** decreases below first threshold **234**. For example, after threshold determiner component **232** determines that the level of compression **216** has fallen below first threshold **234**, then compression disabling component **240** disables compression when transmitting data flow **210**. In other words, in this aspect, compressor component **145** transmits data flow **210** as uncompressed data flow **214** when level of compression **216** meets first threshold **234**, e.g., when sufficient gains cannot be achieved via compressing data flow **210** relative to the cost of resources used to perform the compression. Additionally, compression disabling component **240** may include one or more disable periods **242** (referred to as Z1 and Z2 below, where Z is a positive number) which define time periods or a number of packets for which compression should be disabled. In an aspect, compression disabling component **240** may select one of the one or more disable periods **242**, for example, depending on a number of consecutive times level of compression **216** meets first threshold **234**. In other words, the one or more disable periods **242** may include a plurality of disable periods each having a different time period or number of packets for which compression is disabled. For instance, when level of compression **216** meets first threshold **234** a first number of consecutive times, then compression disabling component **240** may select a first one of the one or more disable periods **242**. Similarly, for instance, when level of compression **216** meets first threshold **234** a second number of consecutive times, then compression disabling component **240** may select a second one of the one or more disable periods **242**, where the second one of the one or more disable periods **242** has a different value than a first one of the one or more disable periods **242**. Such a different value of the second one of the one or more disable periods **242** may, in some cases, be a higher value, while in other cases the different value may be a lower value. For instance, the second one of the one or more disable periods **242** may be a higher value, for example, when it is expected that a larger number of subsequent packets may be needed before a sufficient gain can be achieved via compression.

In an alternative aspect, call processing component **140** of UE **114** (FIG. **1**) may operate to receive multiple data flows **210** and compress a transmission data packet that is from one of the multiple data flows **210** to form compressed data flow **212**, which is sent to call processing component **150** of wireless serving node **116** or network **112** (FIG. **1**). In some instances, a data packet may be a data packet that is transmitted among a plurality of data packets in one of the multiple data flows **210**. Call processing component **140** may maintain information regarding each of the multiple data flows **210** in order to efficiently handle compression operations on the data packets of each of the multiple data flows **210**.

Specifically, in an aspect and referring back to FIG. **2**, state component **148**, located within call processing component **140** of UE **114**, may track or otherwise maintain the compression state **312** for each of the multiple data flows **210**, a level of compression of data flow **216** for each of the multiple data flows **210**, and a packet indicator **336**. For instance, as each of the multiple data flows **210** is received, call processing component **140** may be configured to cause state component **148** to determine compression state **312**, level of compression of data flow **216**, and packet indicator **336**. In some instances, the compression state **312** may correspond to whether compressor **220** is configured to compress packets in a particular data flow **210**. The level of compression of data flow **216** for each of the multiple data flows **210** may correspond to an amount (e.g., packet length) that the original data packet was reduced to. The packet indicator **336** may indicate the last time a data packet belonging to a data flow **210** was seen.

For example, state component **148** may include a determining component **310** for determining a compression state **312** for each of the multiple data flows **210**. For instance, compression state **312** may comprise a testing state **314**, compress state **316**, and do-not-compress state **318**. In an aspect, testing state **314** corresponds to a state where compressor component **145** attempts to compress data packets of each of the multiple data flows **210** for a limited duration in order to measure the level of compression of data flow **216**. During compress state **316**, compressor component **145** may configure compressor **220** to compress data packets of each of the multiple data flows **210** until the level of compression of data flow **216** fails to satisfy a first threshold **234**. In do-not-compress state **318**, compressor **220** may either not compress the data packets of each of the multiple data flows **210** or only compress the data packet headers of the data packets of each of the multiple data flows **210**.

In particular, in an aspect, even though compressor component **145** may be operating in do-not-compress state **318**, compressor component **145** may be configured to perform a compression algorithm **222** for each of the multiple data flows **210** based on an indication from state component **148**. For example, compressor component **145** may be configured to enable compression for a data packet header of a data packet of each of the multiple data flows **210**. Additionally, compres-

sor component **145** may disable compression for a payload of the data packet of each of the multiple data flows **210**. In other words, data packets transmitted on a particular data flow **210** that has a compression state **312** set to a do-not-compress state **318** may have header-only compression enabled. Further, during the compression algorithm **222**, compressor component **145** may update a memory (e.g., memory **584** in FIG. **7**) with the data packet header of the data packet belonging to one of the multiple data flows **210**. Compressor **220** may be configured to perform a plurality of compression algorithms **222**, each of which correspond with one or more multiple data flows **210**.

In another aspect, state component **148** may include updating component **320**, which may be configured to maintain level of compression of data flow **216** for each of the multiple data flows **210** corresponding to a level of compression. The level of compression of data flow **216** may also correspond to a filter compression percentage that is calculated based on the size (e.g., length) of the compressed data packet in relation to the size of the original uncompressed data packet. In some instances, the filter compression percentage may be a ratio of the size of the compressed data packet and the size of the original uncompressed data packet. In other instances, the level of compression of data flow **216** may be calculated based on the level of compression of the payload of each data packet. For example, during the do-not-compress state **318**, evaluating component **230** may set the level of compression of data flow **216** for each of the multiple data flows **210** to a default value (e.g., a value of zero) to indicate that no compression is occurring, or to some other value that represents an amount of compression that is being obtained. In some instances, evaluating component **230** may not update the level of compression of data flow **216** during do-not-compress state **318** due to the payload not being compressed in the do-not-compress state **318**.

On the other hand, during the testing state **314**, compressor component **145** may perform a compression algorithm **222** on each of the multiple data flows **210** set to the testing state **314**, wherein evaluating component **230** updates level of compression of data flow **216** on each of the multiple data flows **210**. For example, evaluating component **230** may initialize the level of compression of data flow **216** to a default value (e.g., a value of zero). Compressor **220** may then compress one or more data packets of each of the multiple data flows **210** set to the testing state **314**. As each data packet is being compressed, evaluating component **230** may update the level of compression of data flow **216** on each of the multiple data flows **210** to represent the level of compression for each data packet, or some mathematical function of the level of compression for multiple packets. In some instances, the level of compression of data flow **216** may correspond to a filter compression percentage that is calculated based on the size (e.g., length) of the compressed data packet in relation to the size of the original uncompressed data packet. In some instances, the filter compression percentage may be a ratio of the size of the compressed data packet and the size of the original uncompressed data packet. In other instances, the level of compression of data flow **216** may be calculated based on the level of compression of the payload of each data packet. Then, evaluating component **230** may be configured to compare the level of compression of data flow **216** on each of the multiple data flows **210** with a first threshold **234**. In some instances, first threshold **234** may be predetermined or may be modifiable. In other instances, evaluating component **230** may compare the level of compression of data flow **216** on each of the multiple data flows **210** with the first threshold **234** when a threshold number of data packets have been compressed.

As such, evaluating component **230** may be configured to inform determining component **310** to change the compression state **312** on each of the multiple data flows **210** based on the comparison of the level of compression of data flow **216** on each of the multiple data flows **210** and the first threshold **234**. For example, if the level of compression of data flow **216** on each of the multiple data flows **210** satisfies the first threshold **234** during the testing state **314** then determining component **310** may change the compression state **312** on each of the multiple data flows **210** to the compress state **316**. As a result, compressor **220** may continue to compress data packets for a respective one of the multiple data flows **210** that remain in the compress state **316**. In particular, compressor **220** may compress one or more data packets of one of the multiple data flows **210**, and the evaluating component **230** may update the level of compression of data flow **216** on each of the multiple data flows **210** as each of their respective data packets are compressed.

During the compress state **316**, evaluating component **230** may continuously or periodically compare the level of compression of data flow **216** on each of the multiple data flows **210** with the first threshold **234**. Determining component **310** may then determine whether to change the compression state **312** from compress state **316** to the do-not-compress state **318** or to maintain the compress state **316** on each of the multiple data flows **210**. In an instance, determining component **310** may change the compression state **312** to the do-not-compress state **318** when the level of compression of data flow **216** on any of the multiple data flows **210** does not satisfy the first threshold **234**. In another instance, compressor **220** may continue to compress data packets of each of the multiple data flows **210** set to the compress state **316** when each of their respective level of compression of data flow **216** satisfies the first threshold **234**.

In another example, if the level of compression of data flow **216** on any of the multiple data flows **210** fails to satisfy the first threshold **234** during the testing state **314**, then determining component **310** may change their respective compression state **312** back to the do-not-compress state **318**. As a result, compressor **220** may perform a compression algorithm **222** where only the data packet headers of the data packets of each of the multiple data flows **210** are compressed and the payloads of the data packets are left uncompressed.

Further, state component **148** may include timer component **330**, which may be configured to maintain the duration **332** for each of the multiple data flows **210** in which compressor **220** performs the compression algorithm **222** in the do-not-compress state **318**. For example, timer component **330** may be configured to determine duration **332** corresponding to an amount of time the compression state **312** is set to the do-not-compress state **318** or a number of data packets compressed during the do-not-compress state **318**. Timer component **330** may maintain a duration threshold **334** for each of the multiple data flows **210**, wherein the timer component **330** uses the duration threshold **334** to determine whether to change the compression state **312** on each of the multiple data flows **210**. In an instance, timer component **330** may determine that duration **332** satisfies the duration threshold **334** for any of the multiple data flows **210**. As a result, compressor component **145** may change the compression state **312** to testing state **314** on the respective multiple data flows **210**, where compressor **220** performs a compression algorithm for each of the multiple data flows **210**.

In another instance, timer component **330** may modify duration threshold **334** based on whether the level of compression of data flow **216** fails to satisfy the first threshold **234** during the testing state **314**. If the level of compression of data

flow **216** on each of the multiple data flows **210** fails to satisfy the first threshold **234** during the testing state **314**, timer component **330** may increase the duration threshold **334**. For example, timer component **330** may increase the duration threshold **334** linearly or exponential for each subsequent failure. Therefore, as duration **332** increases in value, state component **148** maintains in the do-not-compress state **318** without switching to the testing state **314** in order to prevent unnecessary performance of a compression algorithm **222** since the level of compression of data flow **216** of the particular data flow has repeatedly failed to satisfy the first threshold **234**. On the other hand, when the compression state **312** changes from the testing state **314** to the compress state **316**, timer component **330** may reset duration threshold **334** back its initial duration threshold value. Additionally, each time the compression state **312** changes to the do-not-compress state **318** on each of the multiple data flows **210**, timer component **330** resets the duration **332** back to a default value (e.g., a value of zero).

In an alternative or additional aspect, although discussed above with reference to UE **114**, the above noted functionally of call processing component **140** and compressor component **145** may be included in wireless serving node **116** and/or network **112**. For example, but not limited hereto, call processing component **140** and compressor component **145** may be hardware mounted within network **112**, software or computer readable media and/or firmware stored within a memory or processor of wireless serving node **116** and/or network **112**.

Referring to FIG. **3**A, a graphical representation **300** of one aspect of the evaluation of level of compression **216** of data flow **210** and the corresponding enabling or disabling of compression when transmitting data flow **210** illustrates the operation of call processing component **140** and compressor component **145**. As discussed above, compressor **220** compresses portions of data flow **210**, during at least evaluation period **218**, such that evaluating component **230** keeps track of level of compression **216** so that threshold determiner component **232** may trigger compression enabling component **244** or compression disabling component **240** to allow compressor component **145** to transmit compressed data flow **212** or uncompressed data flow **214**.

In the example of FIG. **3**A, level of compression **216** is equivalent to one minus the sum of a payload size of the data flow, after compression, over the sum of the payload size of the data flow, before compression, as represented in equation 1 below.

$$\text{level of compression} = 1 - \left(\frac{\text{total amount of data payload after compression}}{\text{total amount of data payload before compression}} \right) \quad \text{Equation (1)}$$

where, the total amount of data payload after compression is the sum of the payload size, after compression, of the past X data packets in the data flow, e.g., the threshold number of past packets or the number of packets associated with evaluation period **218**. The total amount of data payload before compression is the sum of the payload size, before compression, of the past X data packets in the data flow.

As discussed above, the value of X depends on whether compression is enabled or disabled. For example, when compression is enabled by threshold determiner component **232** triggering compression enabling component **244**, X may be set to X**1**, and when compression disabled by threshold determiner component **232** triggering compression disabling component **240**, X may be set to X**2**. Both **1** and X**2** may be fixed or variable values.

X**1** and X**2** may be set to different values, or in some cases, X**1** and X**2** may be set to the same value. For instance, in FIG. **3**A, X**1** is set to equal three and X**2** is also set to equal three, according to one example. However, X**1** and X**2** may be set to any other value, based on the desired level of enabling or disabling of compression.

When level of compression **216** tracked by evaluating component **230**, decreases below a threshold Y**1** (e.g., first or lower threshold **234**), as determined by threshold determiner component **232**, compression disabling component **240** disables compression for data flow, **210** for the next Z**1** packets, e.g., where Z**1** corresponds to one of the one or more disable periods **242**. The value of Z**1** may be fixed or variable.

For example, in FIG. **3**A, after data packet **13** of data flow **210**, threshold determiner component **232** determines that level of compression **216** has decreased below threshold Y**1**, e.g., first threshold **234**. Thereafter, compression disabling component **240** disables compression for data packet **14** though data packet **21** (e.g., Z**1** packets or disable period **242**) of data flow **210**.

After the uncompressed Z**1** data packets have been transmitted, compressor **220** performs compression on data flow **210** for evaluation period **218**, e.g., X**2** data packets or data packets **22** through **24** in this example, and at the same time, compressor component **145** transmits the corresponding X**2** data packets uncompressed, e.g., as uncompressed data flow **214**. Additionally, evaluating component **230** evaluates level of compression **216** of the data packets associated with evaluation period **218**, e.g., the X**2** data packets of data flow **210** following the transmission of uncompressed Z**1** packets.

If level of compression **216** exceeds threshold Y**2** (e.g., second or higher threshold **236**), as determined by threshold determiner component **232**, then compression enabling component **244** enables compression and compressor component **145** starts transmitting the data packets of the data flow **210**, e.g., packets **25** through **28** in this example, as compressed data packets or compressed data flow **212**.

Referring to FIG. **3**B, in an aspect similar to FIG. **3**A, a graphical representation **302** of another aspect of the evaluation of level of compression **216** of data flow **210** and the corresponding enabling or disabling of compression when transmitting data flow **210** illustrates the operation of call processing component **140** and compressor component **145** when level of compression **216** does not exceed second threshold Y**2** after disable period **242** (e.g., Z**1**) and subsequent evaluation period **218** (e.g., X**2**). In this case, compressor component **145** may initiate another disable period **242** (e.g., Z**2**), which may have a different length than the first disable period. Then, subsequent to the second disable period **242**, compressor component **145** performs evaluation of level of compression **216** for evaluation period **218** (e.g., X**2** in this example), and enables or disables compression according to the above rules.

In the aspect of FIG. **3**B, after determining that level of compression **216** is still below threshold Y**1**, the number of data packets for which compression is disabled (Z**2** or disable period **242**) can be set depending how many such consecutive evaluations of level of compression **216** have failed to exceed threshold Y**1**. For example, in one aspect, the longer level of compression **216** stays below Y**2**, the larger the value of Z**2** becomes.

It should be noted that though the values of X**1**, X**2**, Y**1**, Y**2**, Z**1**, and Z**2** may be fixed or variable, and the values may also

be signaled from the radio network or core network through radio resource control (RRC) signaling and/or or other messages.

It should be noted that level of compression **216** may be computed according to a variety of formulas. In another aspect, for example, level of compression **216** may be defined by the following equation:

$$\text{level of compression} = \frac{\text{Total amount of data payload before compression} - \text{Total amount of data payload after compression}}{X} \quad \text{Equation 2}$$

where X is the threshold number of past data packets over which the level of compression is computed.

In yet another aspect, level of compression **216** may be defined by the following equation:

$$\text{level of compression} = \frac{\text{Number of data packets that are compresible}}{X} \quad \text{Equation 3}$$

where the number of packets that are compressible is the number of packets out of the threshold number of past data packets, e.g., X, for which the payload size after compression is less than a K times the payload size before compression, where K is a constant value that may be determined based on the specific application.

In yet another aspect, level of compression **216** may be defined by the following equation:

$$\text{level of compression} = \frac{\text{Number of data that are compressible}}{X} \quad \text{Equation 4}$$

where the number of packets that are compressible is the number of packets out of the threshold number of past data packets, e.g., X, for which the payload size after compression is less than the payload size before compression minus K, where K is a constant value that may be determined based on the specific application.

Moreover, alternative definitions for level of compression **216** may be signaled by the radio or core network.

Referring to FIG. **4**, in one aspect, a method **350** of wireless communication may be executed, for example, by call processing component **140** and/or compressor component **145** of FIGS. **1** and **2** for selectively enabling or disabling compression of a data flow based on a level of compression that may be achieved.

At **352**, method **350** may include applying, via a compressor, a compression algorithm to a data flow. As discussed above with reference to FIGS. **1**, **2**, **3**A and **3**B, call processing component **140** and/or compressor component **145** of UE **114** or wireless serving node **116** or network **112** is configured for applying compression algorithm **222** onto data flow **210** at compressor **220**. For example, after UE **114** receives data flow **210** from a higher protocol layer or application, compressor **220** is configured to execute compression algorithm **222** to generate compressed data flow **212** from data flow **210**. The information in compressed data flow **212** may have a size that is less than or equal to a size of the information in data flow **210**, which may also be referred to as uncompressed data flow **214**.

As discussed above, one or more data flow **210** may be identified based on one or based on a combination of a transmission control protocol (TCP) source port, a TCP destination port, an IP source address, or an IP destination address for TCP based packets, and a user datagram protocol (UDP) source port, a UDP destination port, an IP source address, and an IP destination address for UDP based packets.

At **353**, method **350** may include evaluating a level of compression of the data flow resulting from the applying of the compression algorithm. As discussed above with reference to FIGS. **1**, **2**, **3**A and **3**B, call processing component **140** and/or compressor component **145** of UE **114** or wireless serving node **116** or network **112** is configured for evaluating level of compression **216** of data flow **210** resulting from applying of compression algorithm **222** by compressor **220**. For example, compressor component **145** may include evaluating component **230** that is configured to evaluate level of compression **216** based on a difference in size between compressed data flow **212** and uncompressed data flow **214**, or based on a number of packets that are compressible at least a defined amount, out of a threshold number of packets. Evaluating component **230** may evaluate level of compression **216** for any number of evaluation periods **218**, which may occur upon receipt of a new packet and which may take into account a threshold number of past packets, e.g., X number of packets, which may vary from one value, e.g., X**1**, when compression is enabled to another value, e.g., X**2**, when compression is disabled, in order to determine level of compression **216**. More specifically, it should be noted that, in some aspects, level of compression **216** may be evaluated according to Equations 1-4, discussed above, although level of compression **216** is not limited to these equations.

At **354**, method **350** may include determining when the level of compression of the data flow is below a first threshold. As discussed above with reference to FIGS. **1**, **2**, **3**A and **3**B, call processing component **140** and/or compressor component **145** of UE **114** or wireless serving node **116** or network **112** is configured for determining when the level of compression of the data flow is below a first threshold. For example, for each evaluation period **218**, compressor component **145** may execute threshold determiner component **232** to determine when level of compression **216** of data flow **210** is below first or lower threshold **234** or Y**1**. For instance, threshold determiner component **232** may determine that level of compression **216** of data flow **210** is below first threshold **234** or Y**1** during an evaluation when compression is enabled (see **460**), or during an evaluation following disable period **242** when compression is disabled. In any case, first threshold **234** or Y**1** represents a value at which the gain from performing compression is not worth the cost, in terms of processing resources and/or communication overhead in transmitting compressed data flow **212**.

At **355**, method **350** may include disabling compression of the data flow when the level of compression decreases below the first threshold, wherein the first threshold is less than the second threshold. As discussed above with reference to FIGS. **1**, **2**, **3**A and **3**B, call processing component **140** and/or compressor component **145** of UE **114** or wireless serving node **116** or network **112** is configured for disabling compression of data flow **210** when level of compression **216** is below first threshold **234** or Y**1**. For example, after threshold determiner component **232** determines that level of compression **216** is below first threshold **234**, e.g., during an evaluation when compression is enabled (see **460**), or during an evaluation

period following a disable period **242** when compression is disabled, compressor component **145** may execute compression disabling component **240** to initiate or continue disabling of compression of data flow **210**. Subsequent to **355**, for example after disable period **242**, method **350** may return to **352** and **353** to evaluate level of compression **216** relative to first threshold **234** and second threshold **236** to determine whether to continue disabling compression or to initiate enabling of compression.

Optionally, at **356**, method **350** may include transmitting the data flow as an uncompressed data flow. As discussed above with reference to FIGS. **1**, **2**, **3**A and **3**B, call processing component **140** and/or compressor component **145** of UE **114** or wireless serving node **116** or network **112** may initiate transmission of uncompressed data flow **214** or original data flow **210**, e.g., via a transmitter or transceiver, or may transmit uncompressed data flow **214** to a lower protocol layer, when level of compression **216** is below first threshold **234** or Y**1**. Subsequent to **356**, method **350** may return to **352** to perform another iteration, as noted above.

At **357**, method **350** may include determining when the level of compression of the data flow is above a second threshold. As discussed above with reference to FIGS. **1**, **2**, **3**A and **3**B, call processing component **140** and/or compressor component **145** of UE **114** or wireless serving node **116** or network **112** is configured for determining when level of compression **216** of data flow **210** is above second threshold **236** or Y**2**. For example, for each evaluation period **218**, compressor component **145** may execute threshold determiner component **232** to determine when level of compression **216** of data flow **210** is above second or higher threshold **236** or Y**2**. For instance, threshold determiner component **232** may determine that level of compression **216** of data flow **210** is above second threshold **236** or Y**2** during an evaluation when compression is disabled, e.g., following disable period **242**, however, such a determination may also be made during an evaluation when compression is enabled (although, generally, first threshold **234** for disabling compression may be considered the more relevant threshold when compression is enabled). In any case, second threshold **236** or Y**2** represents a value at which the gain from performing compression is worth the cost, in terms of processing resources and/or communication overhead in transmitting compressed data flow **212**.

At **358**, method **300300** may include enabling compression of the data flow when the level of compression is above the second threshold, wherein the second threshold is greater than the first threshold. As discussed above with reference to FIGS. **1**, **2**, **3**A and **3**B, call processing component **140** and/or compressor component **145** of UE **114** or wireless serving node **116** or network **112** is configured for enabling compression of data flow **210** when level of compression **216** is above a second threshold **236**. For example, after threshold determiner component **232** determines that level of compression **216** is above second threshold **236** or Y**2**, then compression enabling component **244** enables compression on data flow **210**. In an aspect, compression enabling component **244** operates to enable compression on data flow **210** when level of compression **216** is above second threshold **236** or Y**2** in the case where compression is disabled. In other words, once compression is disabled, e.g., level of compression **216** is below first threshold **234** or Y**1**, then compression enabling component **244** may not enable compression again until level of compression **216** is above second threshold **236** or Y**2**. As such, in the case of compression being enabled, compressor component **145** generates compressed data flow **212** for transmission. In an aspect, subsequent to **358**, method **350** may return to **352** to iterate the evaluation process.

Optionally, at **359**, method **350** may include transmitting the data flow as a compressed data flow. As discussed above with reference to FIGS. **1**, **2**, **3**A and **3**B, call processing component **140** and/or compressor component **145** of UE **114** or wireless serving node **116** or network **112** may initiate transmission, e.g., via a transmitter or transceiver, or may transmit compressed data flow **212** when level of compression **216** meets second threshold **236** or Y**2**. In an aspect, subsequent to **359**, method **350** may return to **352** to iterate the evaluation process.

In an additional optional aspect, at **460**, method **350** may include determining, after enabling compression, if the level of compression is above the first threshold. For example, after initially enabling compression, compression enabling component **244** continues to enable compression of data flow **210** for as long as level of compression **216** is above first threshold **234** or Y**1** for disabling compression. In other words, once compression is enabled, compression enabling component **244** may continue to enable compression of data flow **210** for consecutive evaluation periods **218**, which may occur upon receipt of a new packet and which may take into account level of compression **216** for a threshold number of past packets, e.g., X number of packets as long as level of compression is above first threshold **234** or Y**1**. If so, then method **350** may include returning to **359** to transmit the data flow as compressed data flow **212** and then iterate back to **460**. If not, then method **350** may proceed to **355** and disable compression and **356** to transmit the data flow as uncompressed data flow **214** and then return to the beginning of method **350**.

In an aspect, for example, method **350** may be operated by UE **114** or wireless serving node **116** or network **112** (FIGS. **1** and **2**) executing the call processing component **140** and/or compressor component **145** (FIGS. **1** and **2**), or respective components thereof.

Thus, aspects of this apparatus and method include improving the utilization of processing resources during compression of packet data flows.

Referring to FIGS. **5**A and **5**B, in operation, a UE such as UE **114** (FIG. **2**), or a network such as network **112** (FIG. **2**) may perform one aspect of a methods **400**/**401** for handling incompressible data packets on multiple data flows (e.g., multiple data flows **210210** in FIG. **2**). While, for purposes of simplicity of explanation, the methods herein are shown and described as a series of acts, it is to be understood and appreciated that the methods are not limited by the order of acts, as some acts may, in accordance with one or more aspects, occur in different orders and/or concurrently with other acts from that shown and described herein. For example, it is to be appreciated that the methods could alternatively be represented as a series of interrelated states or events, such as in a state diagram. Moreover, not all illustrated acts may be required to implement a method in accordance with one or more features described herein.

Referring to FIG. **5**A, in an aspect, at block **402**, method **400** includes receiving multiple data flows for compression. For example, as described herein, UE **114** may execute call processing component **140** (FIG. **2**) to receive multiple data flows **210** for compression. In some instances, each of the multiple data flows **210** includes a plurality of data packets, with each data packet having a data packet header and a payload.

At block **404**, method **400** includes determining a compression state for each of the multiple data flows. For example, as described herein, state component **148** may execute determining component **310** (FIG. **2**) to determine a compression

state **312** for each of the multiple data flows **210**. In some instances, compression state **312** may comprise a testing state **314**, compress state **316**, and do-not-compress state **318**.

Further at block **406**, method **400** includes performing a first compression algorithm on each of the multiple data flows determined to have a compression state set to a do-not-compress state. For example, as described herein, call processing component **140** may execute compressor component **145** (FIG. **2**) to perform a first compression algorithm **222** on each of the multiple data flows **210** determined to have a compression state **312** set to a do-not-compress state **318**. In some instances, the compression algorithm **222** includes compressing the data packet header of each data packet without compressing the payload of each data packet.

Referring to FIG. **5**B, a more detailed aspect of the compression algorithm **222** based on the set compression state **312** (FIG. **2**) is described. At block **407**, method **401** includes receiving multiple data flows for compression. For example, as described herein, UE **114** may execute call processing component **140** (FIG. **2**) to receive multiple data flows **210** for compression. In some instances, each of the multiple data flows **210** includes a plurality of data packets, with each data packet having a data packet header and a payload.

Further, at block **409**, method **401** includes determining a compression state for each of the multiple data flows. For example, as described herein, state component **148** may execute determining component **310** (FIG. **2**) to determine a compression state **312** for each of the multiple data flows **210**. In some instances, compression state **312** may comprise a testing state **314**, compress state **316**, and do-not-compress state **318**. In some instances, when the compression state **312** is determined to be set to the compress state **316**, method **401** may proceed to block **408**. In other instances, when the compression state **312** is determined to be set to the do-not-compress state **318**, method **401** may proceed to block **412**. In another instance, when the compression state **312** is determined to be set to testing state **314**, method **401** may proceed to block **410**.

In an aspect, at block **408**, method **401** may include performing a compression algorithm **222** based on the compression state being set to the compress state. For example, as described herein, call processing component **140** may execute compressor component **145** (FIG. **2**) to perform a first compression algorithm **222** on each of the multiple data flows **210** determined to have a compression state **312** set to a compress state **316**.

At block **411**, method **401** may include updating the level of compression on each of the multiple data flows. For example, as described herein, compressor component **145** may execute evaluating component **230** (FIG. **2**) to update the level of compression **216** on each of the multiple data flows **210**. In some instances, the filter compression percentage may be a ratio of the size of the compressed data packet and the size of the original uncompressed data packet. In other instances, the level of compression of data flow **216** may be calculated based on the level of compression of the payload of each data packet.

Moreover, at block **414**, method **401** may include determining whether the level of compression satisfies a threshold. For example, as described herein, compressor component **145** may execute threshold determiner component **232** (FIG. **2**) to determine whether the level of compression **216** on each of the multiple data flows **210** satisfy first threshold **234**. If it is determined that the level of compression **216** on each of the multiple data flows **210** satisfies the first threshold **234** then method **401** returns to block **408**. However, if it is determined that the level of compression **216** on each of the multiple data flows **210** fails to satisfy the first threshold **234** then method **401** may proceed to block **412**.

In another aspect, at block **412**, method **401** may include performing a compression based on the compression state being set to the do-not-compress state. For example, as described herein, call processing component **140** may execute compressor component **145** (FIG. **2**) to perform a first compression algorithm **222** on each of the multiple data flows **210** determined to have a compression state **312** set to a do-not-compress state **318**. In some instances, compressor component **145** may be configured to enable compression for a data packet header of a data packet of each of the multiple data flows **210**. Additionally, compressor component **145** may disable compression for a payload of the data packet of each of the multiple data flows **210**.

At block **415**, method **401** may include determining whether a duration satisfies a threshold. For example, as described herein, state component **148** may execute timer component **330** (FIG. **2**) to determine whether a duration **332** satisfies a duration threshold **334**. In some instances, timer component **330** may maintain a duration threshold **334** for each of the multiple data flows **210**, wherein the timer component **330** uses the duration threshold **334** to determine whether to change the compression state **312** on each of the multiple data flows **210**. If it is determined that duration **332** fails to satisfy the duration threshold **334** then method **401** returns to block **412**. However, if it is determined that duration **332** satisfies the duration threshold **334** then method **401** proceeds to block **410**.

In a further aspect, at block **410**, method **401** may include performing a compression based on the compression state being set to the testing state. For example, as described herein, call processing component **140** may execute compressor component **145** (FIG. **2**) to perform a first compression algorithm **222** on each of the multiple data flows **210** determined to have a compression state **312** set to a testing state **314**.

At block **413**, method **401** may include updating the level of compression on each of the multiple data flows. For example, as described herein, compressor component **145** may execute evaluating component **230** (FIG. **2**) to update the level of compression **216** on each of the multiple data flows **210**. In some instances, the filter compression percentage may be a ratio of the size of the compressed data packet and the size of the original uncompressed data packet. In other instances, the level of compression of data flow **216** may be calculated based on the level of compression of the payload of each data packet.

Moreover, at block **416**, method **401** may include determining whether the level of compression satisfies a threshold. For example, as described herein, compressor component **145** may execute threshold determiner component **232** (FIG. **2**) to determine whether the level of compression **216** on each of the multiple data flows **210** satisfy first threshold **234**. If it is determined that the level of compression **216** on each of the multiple data flows **210** satisfies the first threshold **234** then method **401** proceeds to block **408**. However, if it is determined that the level of compression **216** on each of the multiple data flows **210** fails to satisfy the first threshold **234** then method **401** may proceed to block **412**.

FIGS. **6**A-**6**C are conceptual diagrams illustrating various aspects of the different compression states (e.g., compressions state **312** of FIG. **2**) for each of the multiple data flows **210** (FIG. **2**) of a UE **114** (FIG. **1**) and/or network **112** (FIG. **1**).

For example, in FIG. **6**A, conceptual diagram **420** illustrates the compression states comprising testing state **314**, compress state **316**, and do-not-compress state **318**. Further,

transition arrows **422**, **424**, **426**, and **428** correspond to the possible changes in compression state. For example, when a particular data flow out the multiple data flows **210** is in the do-not-compress state **318**, and duration **332** satisfies duration threshold **334**, then the compression state changes to the testing state **314** as illustrated by transition arrow **422**. In the testing state **314**, data packets of a particular data flow **210** may be compressed, and at some point the compression state may change to either compress state **316** or do-not-compress state **318**. For example, if the level of compression of data flow **216** satisfies a first threshold **234**, then testing state **314** changes to the compress state **316** as illustrated by transition arrow **426**. On the other hand, if during testing state **314**, the level of compression of data flow **216** fails to satisfy a first threshold **234**, then testing state **314** changes to the do-not-compress state **318** as illustrated by transition arrow **424**. Moreover, during the compress state **428**, data packets of a particular data flow **210** may be compressed, and at some point the compression state may change to do-not-compress state **318**. For example, if the level of compression of data flow **216** fails to satisfy a first threshold **234**, then compress state **316** changes to the do-not-compress state **318** as illustrated by transition arrow **428**.

FIG. **6**B illustrates a conceptual diagram **440** of the relationship between the compression state **442** (corresponding to compression state **312**) and time **444** at which each compression state occurs. For example, compression state of one of the multiple data flows **210** (FIG. **2**) may be initially set at a testing state **314***a*. At some point in time, testing state **314***a* may change to do-not-compress state **318***a*. The duration **446** is initially set to a default value until the compression state changes to testing state **314***b*. Subsequently, as testing state **314***b* changes to do-not-compress state **318***b*, duration **448** is increased, so that processing resources are not wasted for a data flow that repeatedly fails to reach a compress state **316**. As such, as the compression state changes to **314***c*, and subsequently to do-not-compress state **318***c*, the amount of time before the compression state changes to testing state **314***d* is increased to duration **450**.

FIG. **6**C illustrates another conceptual diagram **452** of the relationship between the compression state **442** (corresponding to compression state **312**) and time **444** at which each compression state occurs. For example, compression state of one of the multiple data flows **210** (FIG. **2**) may be initially set at a testing state **314***a*. At some point in time, testing state **314***a* may change to do-not-compress state **318***a*. The duration **454** is initially set to a default value until the compression state changes to testing state **314***b*. Subsequently, as testing state **314***b* changes to do-not-compress state **318***b*, duration **448** is increased, so that processing resources are not wasted for a data flow that repeatedly fails to reach a compress state **316**. As such, as the compression state changes to **314***c*, and subsequently to compress state **316***a*, the subsequent duration for do-not-compress states **318***c* is reset to its default value, duration **454**. Therefore, the amount of time **444** before the compression state changes to testing state **314***d* corresponds to duration **454**, which is the same as the duration for do-not-compress state **318***a*.

Referring to FIG. **7**, in one aspect, UE **114** and/or wireless serving node **116** of FIGS. **1** and **2** may be implemented by a specially programmed or configured computer device **580**, wherein the special programming or configuration includes call processing component **140**, as described herein. For example, for implementation as UE **114** (FIGS. **1** and **2**), computer device **580** may include one or more components for computing and transmitting a data from a UE **114** to network **112** via wireless serving node **116**, such as in specially programmed computer readable instructions or code, firmware, hardware, or some combination thereof. Computer device **580** includes a processor **582** for carrying out processing functions associated with one or more of components and functions described herein. Processor **582** can include a single or multiple set of processors or multi-core processors. Moreover, processor **582** can be implemented as an integrated processing system and/or a distributed processing system.

Computer device **580** further includes a memory **584**, such as for storing data used herein and/or local versions of applications being executed by processor **582**. Memory **584** can include any type of memory usable by a computer, such as random access memory (RAM), read only memory (ROM), tapes, magnetic discs, optical discs, volatile memory, non-volatile memory, and any combination thereof.

Further, computer device **580** includes a communications component **586** that provides for establishing and maintaining communications with one or more parties utilizing hardware, software, and services as described herein. Communications component **586** may carry communications between components on computer device **580**, as well as between computer device **580** and external devices, such as devices located across a communications network and/or devices serially or locally connected to computer device **580**. For example, communications component **586** may include one or more buses, and may further include transmit chain components and receive chain components associated with and including a transmitter and receiver, respectively, or a transceiver, operable for interfacing with external devices.

Additionally, computer device **580** may further include a data store **588**, which can be any suitable combination of hardware and/or software, that provides for mass storage of information, databases, and programs employed in connection with aspects described herein. For example, data store **588** may be a data repository for applications not currently being executed by processor **582**.

Computer device **580** may additionally include a user interface component **589** operable to receive inputs from a user of computer device **580**, and further operable to generate outputs for presentation to the user. User interface component **589** may include one or more input devices, including but not limited to a keyboard, a number pad, a mouse, a touch-sensitive display, a navigation key, a function key, a microphone, a voice recognition component, any other mechanism capable of receiving an input from a user, or any combination thereof. Further, user interface component **589** may include one or more output devices, including but not limited to a display, a speaker, a haptic feedback mechanism, a printer, any other mechanism capable of presenting an output to a user, or any combination thereof.

Furthermore, computer device **580** may include, or may be in communication with, call processing component **140**, which may be configured to perform the functions described herein.

Referring to FIG. **8**, in one aspect, an example of a hardware implementation for an apparatus **600** may employ a processing system **614** configured to include call processing component **140** and compressor component **145** (FIGS. **1** and **2**) implementing the functions described above. In this example, the processing system **614** may be implemented with a bus architecture, represented generally by the bus **602**. The bus **602** may include any number of interconnecting buses and bridges depending on the specific application of the processing system **614** and the overall design constraints. The bus **602** links together various circuits including one or more processors, represented generally by the processor **604**, and computer-readable media, represented generally by the com-

puter-readable medium **606**. The bus **602** may also link various other circuits such as timing sources, peripherals, voltage regulators, and power management circuits, which are well known in the art, and therefore, will not be described any further. A bus interface **608** provides an interface between the bus **602** and a transceiver **610**. The transceiver **610** provides a means for communicating with various other apparatus over a transmission medium. Depending upon the nature of the apparatus, a user interface **612** (e.g., keypad, display, speaker, microphone, joystick) may also be provided.

The processor **604** is responsible for managing the bus **602** and general processing, including the execution of software stored on the computer-readable medium **606**. The software, when executed by the processor **604**, causes the processing system **614** to perform the various functions described infra for any particular apparatus. The computer-readable medium **606** may also be used for storing data that is manipulated by the processor **604** when executing software.

In an aspect, processor **604**, computer-readable medium **606**, or a combination of both may be configured or otherwise specially programmed to perform the functionality of the call processing component **140** and/or compressor component **145** (FIGS. **1** and **2**) as described herein.

The various concepts presented throughout this disclosure may be implemented across a broad variety of telecommunication systems, network architectures, and communication standards.

Referring to FIG. **9**, by way of example and without limitation, the aspects of the present disclosure are presented with reference to a UMTS system **700** employing a W-CDMA air interface. A UMTS network includes three interacting domains: a Core Network (CN) **704**, a UMTS Terrestrial Radio Access Network (UTRAN) **702**, and User Equipment (UE) **710**. UE **710** may be configured to include, for example, the call processing component **140** and/or compressor component **145** (FIGS. **1** and **2**) implementing the functions described above. In this example, the UTRAN **702** provides various wireless services including telephony, video, data, messaging, broadcasts, and/or other services. The UTRAN **702** may include a plurality of Radio Network Subsystems (RNSs) such as an RNS **707**, each controlled by a respective Radio Network Controller (RNC) such as an RNC **706**. Here, the UTRAN **702** may include any number of RNCs **706** and RNSs **707** in addition to the RNCs **706** and RNSs **707** illustrated herein. The RNC **706** is an apparatus responsible for, among other things, assigning, reconfiguring and releasing radio resources within the RNS **707**. The RNC **706** may be interconnected to other RNCs (not shown) in the UTRAN **702** through various types of interfaces such as a direct physical connection, a virtual network, or the like, using any suitable transport network.

Communication between a UE **710** and a Node B **708** may be considered as including a physical (PHY) layer and a medium access control (MAC) layer. Further, communication between a UE **710** and an RNC **706** by way of a respective Node B **708** may be considered as including a radio resource control (RRC) layer. In the instant specification, the PHY layer may be considered layer **1**; the MAC layer may be considered layer **2**; and the RRC layer may be considered layer **3**. Information hereinbelow utilizes terminology introduced in the RRC Protocol Specification, 3GPP TS 25.331, incorporated herein by reference.

The geographic region covered by the RNS **707** may be divided into a number of cells, with a radio transceiver apparatus serving each cell. A radio transceiver apparatus is commonly referred to as a Node B in UMTS applications, but may also be referred to by those skilled in the art as a base station (BS), a base transceiver station (BTS), a radio base station, a radio transceiver, a transceiver function, a basic service set (BSS), an extended service set (ESS), an access point (AP), or some other suitable terminology. For clarity, three Node Bs **708** are shown in each RNS **707**; however, the RNSs **707** may include any number of wireless Node Bs. The Node Bs **708** provide wireless access points to a CN **704** for any number of mobile apparatuses. Examples of a mobile apparatus include a cellular phone, a smart phone, a session initiation protocol (SIP) phone, a laptop, a notebook, a netbook, a smartbook, a personal digital assistant (PDA), a satellite radio, a global positioning system (GPS) device, a multimedia device, a video device, a digital audio player (e.g., MP3 player), a camera, a game console, or any other similar functioning device. The UE **710** is commonly referred to as a UE in UMTS applications, but may also be referred to by those skilled in the art as a mobile station, a subscriber station, a mobile unit, a subscriber unit, a wireless unit, a remote unit, a mobile device, a wireless device, a wireless communications device, a remote device, a mobile subscriber station, an access terminal, a mobile terminal, a wireless terminal, a remote terminal, a handset, a terminal, a user agent, a mobile client, a client, or some other suitable terminology. In a UMTS system, the UE **710** may further include a universal subscriber identity module (USIM) **711**, which contains a user's subscription information to a network. For illustrative purposes, one UE **710** is shown in communication with a number of the Node Bs **708**. The DL, also called the forward link, refers to the communication link from a Node B **708** to a UE **710**, and the UL, also called the reverse link, refers to the communication link from a UE **710** to a Node B **708**.

The CN **704** interfaces with one or more access networks, such as the UTRAN **702**. As shown, the CN **704** is a GSM core network. However, as those skilled in the art will recognize, the various concepts presented throughout this disclosure may be implemented in a RAN, or other suitable access network, to provide UEs with access to types of CNs other than GSM networks.

The CN **704** includes a circuit-switched (CS) domain and a packet-switched (PS) domain. Some of the circuit-switched elements are a Mobile services Switching Centre (MSC), a Visitor location register (VLR) and a Gateway MSC. Packet-switched elements include a Serving GPRS Support Node (SGSN) and a Gateway GPRS Support Node (GGSN). Some network elements, like EIR, HLR, VLR and AuC may be shared by both of the circuit-switched and packet-switched domains. In the illustrated example, the CN **704** supports circuit-switched services with a MSC **712** and a GMSC **714**. In some applications, the GMSC **714** may be referred to as a media gateway (MGW). One or more RNCs, such as the RNC **706**, may be connected to the MSC **712**. The MSC **712** is an apparatus that controls call setup, call routing, and UE mobility functions. The MSC **712** also includes a VLR that contains subscriber-related information for the duration that a UE is in the coverage area of the MSC **712**. The GMSC **714** provides a gateway through the MSC **712** for the UE to access a circuit-switched network **716**. The GMSC **714** includes a home location register (HLR) **715** containing subscriber data, such as the data reflecting the details of the services to which a particular user has subscribed. The HLR is also associated with an authentication center (AuC) that contains subscriber-specific authentication data. When a call is received for a particular UE, the GMSC **714** queries the HLR **715** to determine the UE's location and forwards the call to the particular MSC serving that location.

The CN **704** also supports packet-data services with a serving GPRS support node (SGSN) **718** and a gateway

GPRS support node (GGSN) **720**. GPRS, which stands for General Packet Radio Service, is designed to provide packet-data services at speeds higher than those available with standard circuit-switched data services. The GGSN **720** provides a connection for the UTRAN **702** to a packet-based network **722**. The packet-based network **722** may be the Internet, a private data network, or some other suitable packet-based network. The primary function of the GGSN **720** is to provide the UEs **710** with packet-based network connectivity. Data packets may be transferred between the GGSN **720** and the UEs **710** through the SGSN **718**, which performs primarily the same functions in the packet-based domain as the MSC **712** performs in the circuit-switched domain.

An air interface for UMTS may utilize a spread spectrum Direct-Sequence Code Division Multiple Access (DS-CDMA) system. The spread spectrum DS-CDMA spreads user data through multiplication by a sequence of pseudorandom bits called chips. The "wideband" W-CDMA air interface for UMTS is based on such direct sequence spread spectrum technology and additionally calls for a frequency division duplexing (FDD). FDD uses a different carrier frequency for the UL and DL between a Node B **708** and a UE **710**. Another air interface for UMTS that utilizes DS-CDMA, and uses time division duplexing (TDD), is the TD-SCDMA air interface. Those skilled in the art will recognize that although various examples described herein may refer to a W-CDMA air interface, the underlying principles may be equally applicable to a TD-SCDMA air interface.

An HSPA air interface includes a series of enhancements to the 3G/W-CDMA air interface, facilitating greater throughput and reduced latency. Among other modifications over prior releases, HSPA utilizes hybrid automatic repeat request (HARQ), shared channel transmission, and adaptive modulation and coding. The standards that define HSPA include HSDPA (high speed downlink packet access) and HSUPA (high speed uplink packet access, also referred to as enhanced uplink, or EUL).

HSDPA utilizes as its transport channel the high-speed downlink shared channel (HS-DSCH). The HS-DSCH is implemented by three physical channels: the high-speed physical downlink shared channel (HS-PDSCH), the high-speed shared control channel (HS-SCCH), and the high-speed dedicated physical control channel (HS-DPCCH).

Among these physical channels, the HS-DPCCH carries the HARQ ACK/NACK signaling on the uplink to indicate whether a corresponding packet transmission was decoded successfully. That is, with respect to the downlink, the UE **710** provides feedback to the node B **708** over the HS-DPCCH to indicate whether it correctly decoded a packet on the downlink.

HS-DPCCH further includes feedback signaling from the UE **710** to assist the node B **708** in taking the right decision in terms of modulation and coding scheme and precoding weight selection, this feedback signaling including the CQI and PCI.

"HSPA Evolved" or HSPA+ is an evolution of the HSPA standard that includes MIMO and 64-QAM, enabling increased throughput and higher performance. That is, in an aspect of the disclosure, the node B **708** and/or the UE **710** may have multiple antennas supporting MIMO technology. The use of MIMO technology enables the node B **708** to exploit the spatial domain to support spatial multiplexing, beamforming, and transmit diversity.

Multiple Input Multiple Output (MIMO) is a term generally used to refer to multi-antenna technology, that is, multiple transmit antennas (multiple inputs to the channel) and multiple receive antennas (multiple outputs from the channel). MIMO systems generally enhance data transmission performance, enabling diversity gains to reduce multipath fading and increase transmission quality, and spatial multiplexing gains to increase data throughput.

Spatial multiplexing may be used to transmit different streams of data simultaneously on the same frequency. The data steams may be transmitted to a single UE **710** to increase the data rate, or to multiple UEs **710** to increase the overall system capacity. This is achieved by spatially precoding each data stream and then transmitting each spatially precoded stream through a different transmit antenna on the downlink. The spatially precoded data streams arrive at the UE(s) **710** with different spatial signatures, which enables each of the UE(s) **710** to recover the one or more the data streams destined for that UE **710**. On the uplink, each UE **710** may transmit one or more spatially precoded data streams, which enables the node B **708** to identify the source of each spatially precoded data stream.

Spatial multiplexing may be used when channel conditions are good. When channel conditions are less favorable, beamforming may be used to focus the transmission energy in one or more directions, or to improve transmission based on characteristics of the channel. This may be achieved by spatially precoding a data stream for transmission through multiple antennas. To achieve good coverage at the edges of the cell, a single stream beamforming transmission may be used in combination with transmit diversity.

Generally, for MIMO systems utilizing n transmit antennas, n transport blocks may be transmitted simultaneously over the same carrier utilizing the same channelization code. Note that the different transport blocks sent over the n transmit antennas may have the same or different modulation and coding schemes from one another.

On the other hand, Single Input Multiple Output (SIMO) generally refers to a system utilizing a single transmit antenna (a single input to the channel) and multiple receive antennas (multiple outputs from the channel). Thus, in a SIMO system, a single transport block is sent over the respective carrier.

Referring to FIG. **10**, an access network **800** in a UTRAN architecture includes multiple cellular regions (cells) in which a UE including call processing component **140** and/or compressor component **145** (FIGS. **1** and **2**) may operate and perform the functions described herein. The cellular regions of access network **800** include cells **802**, **804**, and **806**, each of which may include one or more sectors. The multiple sectors can be formed by groups of antennas with each antenna responsible for communication with UEs in a portion of the cell. For example, in cell **802**, antenna groups **812**, **814**, and **816** may each correspond to a different sector. In cell **804**, antenna groups **818**, **820**, and **822** each correspond to a different sector. In cell **806**, antenna groups **824**, **826**, and **828** each correspond to a different sector. The cells **802**, **804** and **806** may include several wireless communication devices, e.g., User Equipment or UEs, which may be in communication with one or more sectors of each cell **802**, **804** or **806**. For example, UEs **830** and **832** may be in communication with Node B **842**, UEs **834** and **836** may be in communication with Node B **844**, and UEs **838** and **840** can be in communication with Node B **846**. Here, each Node B **842**, **844**, **846** is configured to provide an access point to a CN **904** (see FIG. **9**) for all the UEs **830**, **832**, **834**, **836**, **838**, **840** in the respective cells **802**, **804**, and **806**. Node Bs **842**, **844**, **846** and UEs **830**, **832**, **834**, **836**, **838**, **840** respectively may be configured to include, for example, the call processing component **140** and/or compressor component **145** (FIGS. **1** and **2**) implementing the functions described above.

As the UE **834** moves from the illustrated location in cell **804** into cell **806**, a serving cell change (SCC) or handover may occur in which communication with the UE **834** transitions from the cell **804**, which may be referred to as the source cell, to cell **806**, which may be referred to as the target cell. Management of the handover procedure may take place at the UE **834**, at the Node Bs corresponding to the respective cells, at a radio network controller **706** (see FIG. **9**), or at another suitable node in the wireless network. For example, during a call with the source cell **804**, or at any other time, the UE **834** may monitor various parameters of the source cell **804** as well as various parameters of neighboring cells such as cells **806** and **802**. Further, depending on the quality of these parameters, the UE **834** may maintain communication with one or more of the neighboring cells. During this time, the UE **834** may maintain an Active Set, that is, a list of cells that the UE **834** is simultaneously connected to (i.e., the UTRA cells that are currently assigning a downlink dedicated physical channel DPCH or fractional downlink dedicated physical channel F-DPCH to the UE **834** may constitute the Active Set).

The modulation and multiple access scheme employed by the access network **800** may vary depending on the particular telecommunications standard being deployed. By way of example, the standard may include Evolution-Data Optimized (EV-DO) or Ultra Mobile Broadband (UMB). EV-DO and UMB are air interface standards promulgated by the 3rd Generation Partnership Project 2 (3GPP2) as part of the CDMA2000 family of standards and employs CDMA to provide broadband Internet access to mobile stations. The standard may alternately be Universal Terrestrial Radio Access (UTRA) employing Wideband-CDMA (W-CDMA) and other variants of CDMA, such as TD-SCDMA; Global System for Mobile Communications (GSM) employing TDMA; and Evolved UTRA (E-UTRA), Ultra Mobile Broadband (UMB), and Flash-OFDM employing OFDMA. CDMA2000 and UMB are described in documents from the 3GPP2 organization. The actual wireless communication standard and the multiple access technology employed will depend on the specific application and the overall design constraints imposed on the system.

The radio protocol architecture may take on various forms depending on the particular application. An example for an HSPA system will now be presented with reference to FIG. **11**.

Referring to FIG. **11**, an example of the radio protocol architecture **900** for the user plane **902** and the control plane **904** may be included in a network entity and/or UE such as an entity within network **112** and/or UE **114** (FIGS. **1** and **2**). The radio protocol architecture **900** for the UE and node B is shown with three layers: Layer **1 906**, Layer **2 908**, and Layer **3 910**. Layer **1 906** is the lowest lower and implements various physical layer signal processing functions. As such, Layer **1 906** includes the physical layer **907**. Layer **2** (L**2** layer) **908** is above the physical layer **907** and is responsible for the link between the UE and node B over the physical layer **907**. Layer **3** (L**3** layer) **910** includes a radio resource control (RRC) sublayer **915**. The RRC sublayer **915** handles the control plane signaling of Layer **3** between the UE and the UTRAN.

In the user plane, the L**2** layer **908** includes a media access control (MAC) sublayer **909**, a radio link control (RLC) sublayer **911**, and a packet data convergence protocol (PDCP) **913** sublayer, which are terminated at the node B on the network side. Although not shown, the UE may have several upper layers above the L**2** layer **908** including a network layer (e.g., IP layer) that is terminated at a PDN gateway on the network side, and an application layer that is terminated at the other end of the connection (e.g., far end UE, server, etc.).

The PDCP sublayer **913** provides multiplexing between different radio bearers and logical channels. The PDCP sublayer **913** also provides header compression for upper layer data packets to reduce radio transmission overhead, security by ciphering the data packets, and handover support for UEs between node Bs. The RLC sublayer **911** provides segmentation and reassembly of upper layer data packets, retransmission of lost data packets, and reordering of data packets to compensate for out-of-order reception due to hybrid automatic repeat request (HARQ). The MAC sublayer **909** provides multiplexing between logical and transport channels. The MAC sublayer **909** is also responsible for allocating the various radio resources (e.g., resource blocks) in one cell among the UEs. The MAC sublayer **909** is also responsible for HARQ operations.

Referring to FIG. **12**, a communication system **1000** includes a Node B **1010** in communication with a UE **1050**, where Node B **1010** may be wireless serving node **116** or an entity within network **112** and the UE **1050** may be UE **114** having call processing component **140** and/or compressor component **145** according to the aspects described in FIGS. **1** and **2**. In the downlink communication, a transmit processor **1020** may receive data from a data source **1012** and control signals from a controller/processor **1040**. The transmit processor **1020** provides various signal processing functions for the data and control signals, as well as reference signals (e.g., pilot signals). For example, the transmit processor **1020** may provide cyclic redundancy check (CRC) codes for error detection, coding and interleaving to facilitate forward error correction (FEC), mapping to signal constellations based on various modulation schemes (e.g., binary phase-shift keying (BPSK), quadrature phase-shift keying (QPSK), M-phase-shift keying (M-PSK), M-quadrature amplitude modulation (M-QAM), and the like), spreading with orthogonal variable spreading factors (OVSF), and multiplying with scrambling codes to produce a series of symbols. Channel estimates from a channel processor **1044** may be used by a controller/processor **1040** to determine the coding, modulation, spreading, and/or scrambling schemes for the transmit processor **1020**. These channel estimates may be derived from a reference signal transmitted by the UE **1050** or from feedback from the UE **1050**. The symbols generated by the transmit processor **1020** are provided to a transmit frame processor **1030** to create a frame structure. The transmit frame processor **1030** creates this frame structure by multiplexing the symbols with information from the controller/processor **1040**, resulting in a series of frames. The frames are then provided to a transmitter **1032**, which provides various signal conditioning functions including amplifying, filtering, and modulating the frames onto a carrier for downlink transmission over the wireless medium through antenna **1034**. The antenna **1034** may include one or more antennas, for example, including beam steering bidirectional adaptive antenna arrays or other similar beam technologies.

At the UE **1050**, a receiver **1054** receives the downlink transmission through an antenna **1052** and processes the transmission to recover the information modulated onto the carrier. The information recovered by the receiver **1054** is provided to a receive frame processor **1060**, which parses each frame, and provides information from the frames to a channel processor **1094** and the data, control, and reference signals to a receive processor **1070**. The receive processor **1070** then performs the inverse of the processing performed by the transmit processor **1020** in the Node B **1010**. More specifically, the receive processor **1070** descrambles and despreads the symbols, and then determines the most likely signal constellation points transmitted by the Node B **1010**

based on the modulation scheme. These soft decisions may be based on channel estimates computed by the channel processor **1094**. The soft decisions are then decoded and deinterleaved to recover the data, control, and reference signals. The CRC codes are then checked to determine whether the frames were successfully decoded. The data carried by the successfully decoded frames will then be provided to a data sink **1072**, which represents applications running in the UE **1050** and/or various user interfaces (e.g., display). Control signals carried by successfully decoded frames will be provided to a controller/processor **1090**. When frames are unsuccessfully decoded by the receiver processor **1070**, the controller/processor **1090** may also use an acknowledgement (ACK) and/or negative acknowledgement (NACK) protocol to support retransmission requests for those frames.

In the uplink, data from a data source **1078** and control signals from the controller/processor **1090** are provided to a transmit processor **1080**. The data source **1078** may represent applications running in the UE **1050** and various user interfaces (e.g., keyboard). Similar to the functionality described in connection with the downlink transmission by the Node B **1010**, the transmit processor **1080** provides various signal processing functions including CRC codes, coding and interleaving to facilitate FEC, mapping to signal constellations, spreading with OVSFs, and scrambling to produce a series of symbols. Channel estimates, derived by the channel processor **1094** from a reference signal transmitted by the Node B **1010** or from feedback contained in the midamble transmitted by the Node B **1010**, may be used to select the appropriate coding, modulation, spreading, and/or scrambling schemes. The symbols produced by the transmit processor **1080** will be provided to a transmit frame processor **1082** to create a frame structure. The transmit frame processor **1082** creates this frame structure by multiplexing the symbols with information from the controller/processor **1090**, resulting in a series of frames. The frames are then provided to a transmitter **1056**, which provides various signal conditioning functions including amplification, filtering, and modulating the frames onto a carrier for uplink transmission over the wireless medium through the antenna **1052**.

The uplink transmission is processed at the Node B **1010** in a manner similar to that described in connection with the receiver function at the UE **1050**. A receiver **1035** receives the uplink transmission through the antenna **1034** and processes the transmission to recover the information modulated onto the carrier. The information recovered by the receiver **1035** is provided to a receive frame processor **1036**, which parses each frame, and provides information from the frames to the channel processor **1044** and the data, control, and reference signals to a receive processor **1038**. The receive processor **1038** performs the inverse of the processing performed by the transmit processor **1080** in the UE **1050**. The data and control signals carried by the successfully decoded frames may then be provided to a data sink **1039** and the controller/processor, respectively. If some of the frames were unsuccessfully decoded by the receive processor, the controller/processor **1040** may also use an acknowledgement (ACK) and/or negative acknowledgement (NACK) protocol to support retransmission requests for those frames.

The controller/processors **1040** and **1090** may be used to direct the operation at the Node B **1010** and the UE **1050**, respectively. For example, the controller/processors **1040** and **1090** may provide various functions including timing, peripheral interfaces, voltage regulation, power management, and other control functions. The computer readable media of memories **1042** and **1092** may store data and software for the Node B **1010** and the UE **1050**, respectively. A scheduler/processor **1046** at the Node B **1010** may be used to allocate resources to the UEs and schedule downlink and/or uplink transmissions for the UEs.

Several aspects of a telecommunications system have been presented with reference to a W-CDMA system. As those skilled in the art will readily appreciate, various aspects described throughout this disclosure may be extended to other telecommunication systems, network architectures and communication standards.

By way of example, various aspects may be extended to other UMTS systems such as TD-SCDMA, High Speed Downlink Packet Access (HSDPA), High Speed Uplink Packet Access (HSUPA), High Speed Packet Access Plus (HSPA+) and TD-CDMA. Various aspects may also be extended to systems employing Long Term Evolution (LTE) (in FDD, TDD, or both modes), LTE-Advanced (LTE-A) (in FDD, TDD, or both modes), CDMA2000, Evolution-Data Optimized (EV-DO), Ultra Mobile Broadband (UMB), IEEE 802.11 (Wi-Fi), IEEE 802.16 (WiMAX), IEEE 802.20, Ultra-Wideband (UWB), Bluetooth, and/or other suitable systems. The actual telecommunication standard, network architecture, and/or communication standard employed will depend on the specific application and the overall design constraints imposed on the system.

In accordance with various aspects of the disclosure, an element, or any portion of an element, or any combination of elements may be implemented with a "processing system" or processor (FIG. **5** or **6**) that includes one or more processors. Examples of processors include microprocessors, microcontrollers, digital signal processors (DSPs), field programmable gate arrays (FPGAs), programmable logic devices (PLDs), state machines, gated logic, discrete hardware circuits, and other suitable hardware configured to perform the various functionality described throughout this disclosure. One or more processors in the processing system may execute software. Software shall be construed broadly to mean instructions, instruction sets, code, code segments, program code, programs, subprograms, software modules, applications, software applications, software packages, routines, subroutines, objects, executables, threads of execution, procedures, functions, etc., whether referred to as software, firmware, middleware, microcode, hardware description language, or otherwise. The software may reside on a computer-readable medium **606** (FIG. **8**). The computer-readable medium **606** (FIG. **8**) may be a non-transitory computer-readable medium. A non-transitory computer-readable medium includes, by way of example, a magnetic storage device (e.g., hard disk, floppy disk, magnetic strip), an optical disk (e.g., compact disk (CD), digital versatile disk (DVD)), a smart card, a flash memory device (e.g., card, stick, key drive), random access memory (RAM), read only memory (ROM), programmable ROM (PROM), erasable PROM (EPROM), electrically erasable PROM (EEPROM), a register, a removable disk, and any other suitable medium for storing software and/or instructions that may be accessed and read by a computer. The computer-readable medium may also include, by way of example, a carrier wave, a transmission line, and any other suitable medium for transmitting software and/or instructions that may be accessed and read by a computer. The computer-readable medium may be resident in the processing system, external to the processing system, or distributed across multiple entities including the processing system. The computer-readable medium may be embodied in a computer-program product. By way of example, a computer-program product may include a computer-readable medium in packaging materials. Those skilled in the art will recognize how best to implement the described functionality presented throughout

this disclosure depending on the particular application and the overall design constraints imposed on the overall system.

It is to be understood that the specific order or hierarchy of steps in the methods disclosed is an illustration of exemplary processes. Based upon design preferences, it is understood that the specific order or hierarchy of steps in the methods may be rearranged. The accompanying method claims present elements of the various steps in a sample order, and are not meant to be limited to the specific order or hierarchy presented unless specifically recited therein.

The previous description is provided to enable any person skilled in the art to practice the various aspects described herein. Various modifications to these aspects will be readily apparent to those skilled in the art, and the generic principles defined herein may be applied to other aspects. Thus, the claims are not intended to be limited to the aspects shown herein, but is to be accorded the full scope consistent with the language of the claims, wherein reference to an element in the singular is not intended to mean "one and only one" unless specifically so stated, but rather "one or more." Unless specifically stated otherwise, the term "some" refers to one or more. A phrase referring to "at least one of" a list of items refers to any combination of those items, including single members. As an example, "at least one of: a, b, or c" is intended to cover: a; b; c; a and b; a and c; b and c; and a, b and c. Moreover, nothing disclosed herein is intended to be dedicated to the public regardless of whether such disclosure is explicitly recited in the claims. No claim element is to be construed under the provisions of 35 U.S.C. §112, sixth paragraph, unless the element is expressly recited using the phrase "means for" or, in the case of a method claim, the element is recited using the phrase "step for."

What is claimed is:

1. A method of compression on multiple data flows for communication between a user equipment (UE) and a serving node, comprising:

receiving multiple data flows for compression, wherein each of the multiple data flows includes a plurality of data packets, with each data packet having a data packet header and a payload;

determining a compression state for each of the multiple data flows;

performing a first compression algorithm on each of the multiple data flows determined to have a compression state set to a do-not-compress state, wherein the first compression algorithm includes compressing the data packet header of each data packet without compressing the payload of each data packet;

determining a duration corresponding to at least one or both of an amount of time the compression state is set to the do-not-compress state and a number of packets compressed during the do-not-compress state for each of the multiple data flows;

changing the compression state to a testing state on each of the multiple data flows in response to determining that the duration exceeded a duration threshold; and

performing a second compression algorithm on each of the multiple data flows with the compression state set to a testing state.

2. The method of claim **1**, wherein performing the first compression algorithm on each of the multiple data flows further comprises setting a filtered compression percentage for each of the multiple data flows, wherein the filtered compression percentage corresponds to a level of compression on each of the multiple data flows.

3. The method of claim **2**, wherein the level of compression on each of the multiple data flows corresponds to a level of compression of the payload of each data packet.

4. The method of claim **1**, wherein performing the second compression algorithm on each of the multiple data flows further comprises:

initializing a filtered compression percentage to a default value on each of the multiple data flows, wherein the filtered compression percentage corresponds to a level of compression on each of the multiple data flows;

compressing one or more data packets on each of the multiple data flows;

updating the filtered compression percentage on each of the multiple data flows as each of the one or more data packets are compressed;

comparing the filtered compression percentage on each of the multiple data flows to a compression threshold for each of the multiple data flows; and

determining whether to change the compression state on each of the multiple data flows based on the comparison.

5. The method of claim **4**, wherein the level of compression on each of the multiple data flows corresponds to a level of compression of the payload of each data packet.

6. The method of claim **4**, wherein determining whether to change the compression state on each of the multiple data flows based on the comparison further comprises:

changing the compression state to a compress state when the filtered compression percentage satisfies the compression threshold; and

changing the compression state to the do-not-compress state when the filtered compression percentage does not satisfy the compression threshold.

7. The method of claim **6**, further comprising increasing the duration threshold when the compression state is changed to the do-not-compress state, wherein the duration threshold is increased either linearly or exponentially.

8. The method of claim **6**, further comprising resetting the duration threshold to an initial duration threshold value when the compression state changes to the compress state.

9. The method of claim **6**, wherein changing the compression state to the compress state further comprises:

compressing one or more data packets on each of the multiple data flows;

updating the filtered compression percentage on each of the multiple data flows as each of the one or more data packets are compressed;

comparing the filtered compression percentage on each of the multiple data flows to the compression threshold; and

determining whether to change the compression state on each of the multiple data flows based on the comparison.

10. The method of claim **9**, wherein determining whether to change the compression state on each of the multiple data flows based on the comparison further comprises:

changing the compression state to the do-not-compress state when the filtered compression percentage does not satisfy the compression threshold; and

continuing to compress the one or more data packets on each of the multiple data flows when the filtered compression percentage satisfies the compression threshold.

11. The method of claim **6**, wherein comparing the filtered compression percentage to the compression threshold occurs when a threshold number of the one or more data packets are compressed.

12. The method of claim **1**, wherein performing the first compression algorithm on each of the multiple data flows

further comprises updating a memory of the compressor with the data packet header of each data packet.

13. An apparatus for compression on multiple data flows for communication between a user equipment (UE) and a serving node, comprising:

means for receiving multiple data flows for compression, wherein each of the multiple data flows includes a plurality of data packets, with each data packet having a data packet header and a payload;

means for determining a compression state for each of the multiple data flows;

means for performing a first compression algorithm on each of the multiple data flows determined to have a compression state set to a do-not-compress state, wherein the first compression algorithm includes compressing the data packet header of each data packet without compressing the payload of each data packet;

means for determining a duration corresponding to at least one or both of an amount of time the compression state is set to the do-not-compress state and a number of packets compressed during the do-not-compress state for each of the multiple data flows;

means for changing the compression state to a testing state on each of the multiple data flows in response to determining that the duration exceeded a duration threshold; and

means for performing a second compression algorithm on each of the multiple data flows with the compression state set to a testing state.

14. An apparatus for compression on multiple data flows for communication between a user equipment (UE) and a serving node, comprising:

a memory that stores instructions; and

at least one processor coupled with the memory, wherein the at least one processor and the memory are configured to:

receive multiple data flows for compression, wherein each of the multiple data flows includes a plurality of data packets, with each data packet having a data packet header and a payload;

determine a compression state for each of the multiple data flows;

perform a first compression algorithm on each of the multiple data flows determined to have a compression state set to a do-not-compress state, wherein the first compression algorithm includes compressing the data packet header of each data packet without compressing the payload of each data packet;

determine a duration corresponding to at least one or both of an amount of time the compression state is set to the do-not-compress state and a number of packets compressed during the do-not-compress state for each of the multiple data flows;

change the compression state to a testing state on each of the multiple data flows in response to determining that the duration exceeded a duration threshold; and

perform a second compression algorithm on each of the multiple data flows with the compression state set to a testing state.

15. The apparatus of claim 14, wherein to perform the first compression algorithm the at least one processor and the memory are further configured to set a filtered compression percentage for each of the multiple data flows, wherein the filtered compression percentage corresponds to a level of compression on each of the multiple data flows.

16. The apparatus of claim 15, wherein the level of compression on each of the multiple data flows corresponds to a level of compression of the payload of each data packet.

17. The apparatus of claim 15, wherein the at least one processor and the memory configured to perform the second compression algorithm are further configured to:

initialize a filtered compression percentage to a default value on each of the multiple data flows, wherein the filtered compression percentage corresponds to a level of compression on each of the multiple data flows;

compress one or more data packets on each of the multiple data flows;

update the filtered compression percentage on each of the multiple data flows as each of the one or more data packets are compressed;

compare the filtered compression percentage on each of the multiple data flows to a compression threshold for each of the multiple data flows; and

determine whether to change the compression state on each of the multiple data flows based on the comparison.

18. The apparatus of claim 17, wherein the level of compression on each of the multiple data flows corresponds to a level of compression of the payload of each data packet.

19. The apparatus of claim 17, wherein the at least one processor and the memory configured to determine whether to change the compression state are further configured to:

change the compression state to a compress state when the filtered compression percentage satisfies the compression threshold; and

change the compression state to the do-not-compress state when the filtered compression percentage does not satisfy the compression threshold.

20. The apparatus of claim 19, wherein the at least one processor and the memory are further configured to increase the duration threshold when the compression state is changed to the do-not-compress state, and wherein the duration threshold is increased either linearly or exponentially.

21. The apparatus of claim 19, wherein the at least one processor and the memory are further configured to reset the duration threshold to an initial duration threshold value when the compression state changes to the compress state.

22. The apparatus of claim 19, wherein the at least one processor and the memory configured to change the compression state to the compress state are further configured to:

compress one or more data packets on each of the multiple data flows;

update the filtered compression percentage on each of the multiple data flows as each of the one or more data packets are compressed;

compare the filtered compression percentage on each of the multiple data flows to the compression threshold; and

determine whether to change the compression state on each of the multiple data flows based on the comparison.

23. The apparatus of claim 22, wherein the at least one processor and the memory configured to determine whether to change the compression state are further configured to:

change the compression state to the do-not-compress state when the filtered compression percentage does not satisfy the compression threshold; and

continue to compress the one or more data packets on each of the multiple data flows when the filtered compression percentage satisfies the compression threshold.

24. The apparatus of claim 19, wherein the at least one processor and the memory are configured to compare the filtered compression percentage to the compression threshold occurs when a threshold number of the one or more data packets are compressed.

25. The apparatus of claim 14, wherein the at least one processor and the memory configured to perform the first compression algorithm are further configured to update a memory of the compressor with the data packet header of each data packet.

26. A non-transitory computer-readable medium storing computer executable code for compression on multiple data flows for communication between a user equipment (UE) and a serving node, comprising:

code for receiving multiple data flows for compression, wherein each of the multiple data flows includes a plurality of data packets, with each data packet having a data packet header and a payload;

code for determining a compression state for each of the multiple data flows;

code for performing a first compression algorithm on each of the multiple data flows determined to have a compression state set to a do-not-compress state, wherein the first compression algorithm includes compressing the data packet header of each data packet without compressing the payload of each data packet;

code for determining a duration corresponding to at least one or both of an amount of time the compression state is set to the do-not-compress state and a number of packets compressed during the do-not-compress state for each of the multiple data flows;

code for changing the compression state to a testing state on each of the multiple data flows in response to determining that the duration exceeded a duration threshold; and

code for performing a second compression algorithm on each of the multiple data flows with the compression state set to a testing state.

* * * * *